INFORMATIVE MATERIAL 5

QUICK LASHING GUIDE

Cargo securing on CTUs for transports on Road, Combined Rail and in Sea Area A, B & C

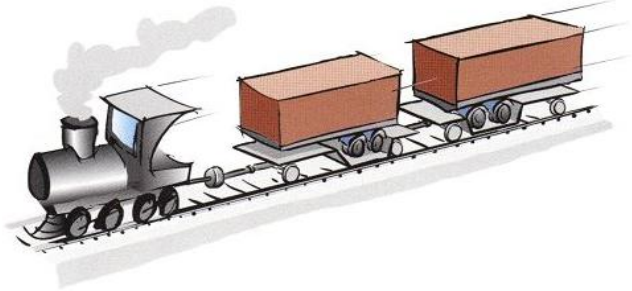



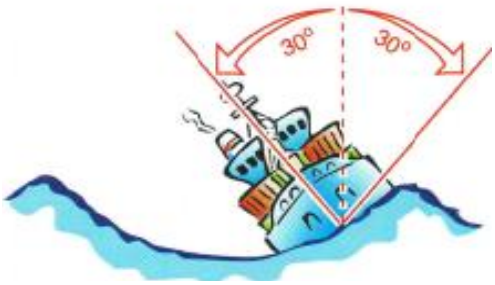

SEA AREAS

A	B	C
$H_s \leq 8$ m	8 m < $H_s \leq$ 12 m	H_s > 12 m
Baltic Sea (incl. Kattegat) Mediterranean Sea Black Sea Red Sea Persian Gulf Coastal or inter–island voyages in following areas: Central Atlantic Ocean (between 30°N and 35°S) Central Indian Ocean (down to 35°S) Central Pacific Ocean (between 30°N and 35°S)	North Sea Skagerak English Channel Sea of Japan Sea of Okhotsk Coastal or inter-island voyages in following areas: South-Central Atlantic Ocean (between 35°S and 40°S) South-Central Indian Ocean (between 35°S and 40°S) South-Central Pacific Ocean (between 35°S and 45°S)	unrestricted

CONTENT	**Chapter/Section/Subsection**
CARGO SECURING METHODS	1
Blocking and Bracing	1.1
Top-over lashing	1.2
Half-loop lashing	1.3
Straight lashing	1.4
Spring lashing	1.5
BASIC CARGO SECURING REQUIREMENTS	2
Non – rigid goods	2.1
Rolling units	2.2
Bottom blocking	2.3
Supporting edge beam	2.4
Blocking against the doors	2.4
Nailing	2.6
SLIDING - FRICTION	3
TIPPING – DIMENSIONS	4
CARGO SECURING EQUIMENT	5
Labelling	5.1
Maximum Securing Load (MSL)	5.2
Lashing eyes	5.3
CONVERSION FACTORS FOR OTHER TYPES OF LASHING EQUIPMENT	6
REQUIRED NUMBER OF LASHINGS	7
CARGO STOWED IN MORE THAN ONE LAYER	8
Method 1 (simple)	8.1
Method 2 (advanced)	8.2
ALTERNATIVE METHODS	9
QUICK LASHING GUIDE A	**10**
GENERAL REMARKS	10.1
WEBBING	10.2
Top-over lashing	10.2.1
Half-loop lashing	10.2.2
Straight lashing	10.2.3
Spring lashing	10.2.4
TAG WASHERS AND NAILS	10.3

QUICK LASHING GUIDE B **11**
GENERAL REMARKS 11.1
WEBBING 11.2
Top-over lashing 11.2.1
Half-loop lashing 11.2.2
Straight lashing 11.2.3
Spring lashing 11.2.4
CHAIN 11.3
Top-over lashing 11.3.1
Half-loop lashing 11.3.2
Straight lashing 11.3.3
Spring lashing 11.3.4
STEEL STRAPPING 11.4
Top-over lashing 11.4.1
Half-loop lashing 11.4.2
Straight lashing 11.4.3
Spring lashing 11.4.4
WIRE 11.5
Top-over lashing 11.5.1
Half-loop lashing 11.5.2
Straight lashing 11.5.3
Spring lashing 11.5.4
TAG WASHERS AND NAILS 11.6

QUICK LASHING GUIDE C **12**
GENERAL REMARKS 12.1
WEBBING 12.2
Top-over lashing 12.2.1
Half-loop lashing 12.2.2
Straight lashing 12.2.3
Spring lashing 12.2.4
CHAIN 12.3
Top-over lashing 12.3.1
Half-loop lashing 12.3.2
Straight lashing 12.3.3
Spring lashing 12.3.4

STEEL STRAPPING	12.4
Top-over lashing	12.4.1
Half-loop lashing	12.4.2
Straight lashing	12.4.3
Spring lashing	12.4.4
WIRE	12.5
Top-over lashing	12.5.1
Half-loop lashing	12.5.2
Straight lashing	12.5.3
Spring lashing	12.5.4
TAG WASHERS AND NAILS	12.6

1 CARGO SECURING METHODS

Goods should be prevented from sliding and tipping in forward, backward and sideways directions by locking, blocking, lashing or a combination of these methods.

1.1 Blocking and Bracing

1.1.1 Blocking means that the cargo is stowed against fixed blocking structures and fixtures on the CTU. Clumps, wedges, dunnage, stanchions, inflatable dunnage bags and other devices which are supported directly or indirectly by fixed blocking structures are also considered as blocking.

1.1.2 Blocking is primarily a method to prevent the cargo from sliding, but if the blocking reaches high enough, it also prevents tipping. Blocking is the primary method for cargo securing and should be used as far as possible.

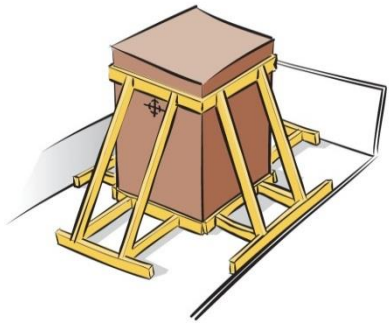

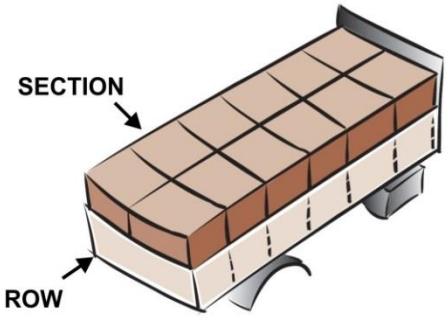

1.1.3 The sum of void spaces in any horizontal direction should not exceed 15 cm. However, between dense rigid cargo items, such as steel, concrete or stone, the void spaces should be further minimized, as far as possible.

1.2 Top–over lashing

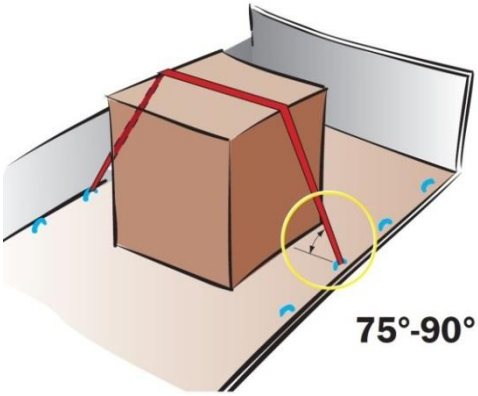

When using the tables for top–over lashing the angle between the lashing and the platform bed is of great importance. The tables are valid for an angle between 75° to 90°. If the angle is between 30° to 75° twice the number of lashings are needed (alternatively the table values are halved). If the angle is less than 30°, another cargo securing method should be used.

Top–over lashings preventing tipping forward **and** backward should be placed symmetrically on the cargo.

1.3 Half-loop lashing

A pair of half-loop lashings prevents cargo from sliding and tipping sideways. Minimum one pair of half-loop lashings per section should be used.

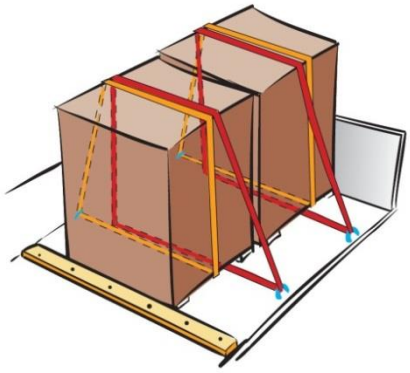

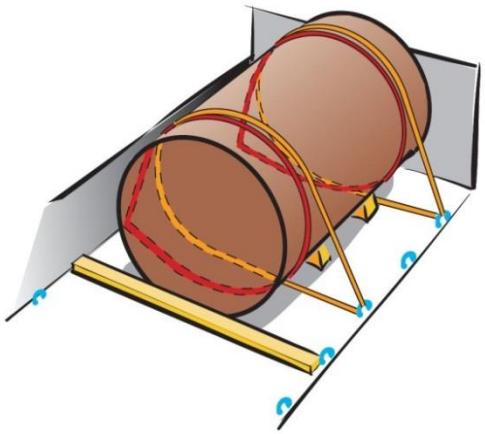

For tipping half the Maximum Securing Load (MSL) value should be used for design purposes.

When long cargo units are secured with half-loop lashings, at least two pairs should be used to prevent the cargo from twisting.

1.4 Straight lashing

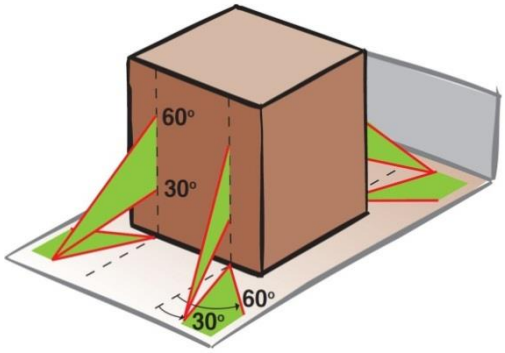

The tables are valid for an angle of 30° to 60° between the lashing and the platform bed.

Sideways and lengthways the lashing angle should also lie between 30° to 60°.

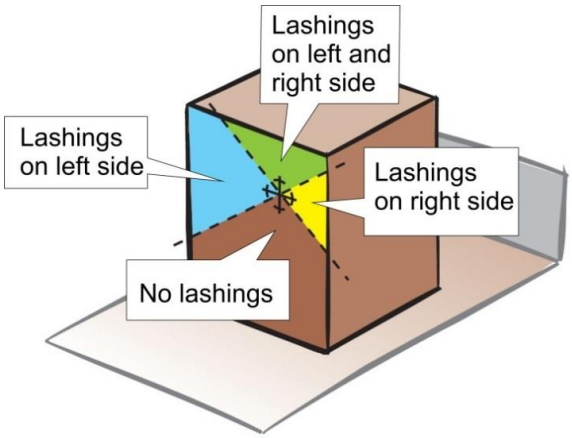

The allowable areas for fixing the lashings on the cargo unit are bounded by straight lines (one for each side), drawn through the centre of gravity in an angle of 45°.

When the lashings are fixed above the centre of gravity, the unit may also have to be blocked at the bottom to prevent sliding.

1.5 Spring lashing

1.5.1 A spring lashing is used to prevent cargo from sliding and tipping forward or backward.

1.5.2 The values in the tables for spring lashings are valid when the diagonal parts of the lashing are close to parallel to the long sides of the CTU

1.5.3 The angle between the lashing and the platform bed should be maximum 45°.

1.5.4 There are a number of ways to apply spring lashings, as illustrated below.



A.



B.

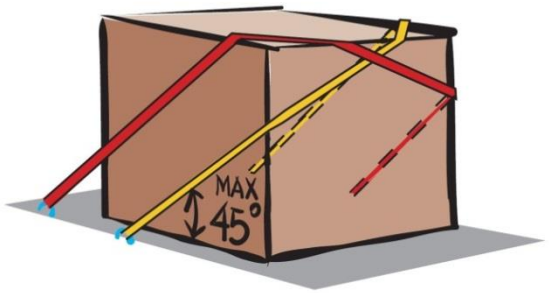

C.

1.5.5 Observe:

- alternative A is not fully effective for tipping avoidance;
- alternative C has two parts per side and thus secures twice the cargo mass given in the lashing tables.

1.5.6 If the spring lashing does not act on the top of the cargo the mass prevented from tipping is decreased, e.g. if the spring lashing acts at half the cargo height, it secures half the cargo mass given in the tipping tables.

1.5.7 For cargo units with the centre of gravity above their half height, the table values for tipping should be halved.

1.5.8 To prevent tipping, the spring lashing should be dimensioned for the mass of the outer section only.

2 BASIC CARGO SECURING REQUIREMENTS

2.1 Non–rigid goods

If the goods are not rigid in form (bags, bales etc.) more lashings than prescribed in this quick lashing guide may be needed.

2.2 Rolling units

If rolling units are not blocked, chocks with a height of at least 1/3 of the radius should be used.

If the unit is secured by lashings ensuring that the unit cannot roll over the chocks, the chock height need not to be greater than 20 cm.

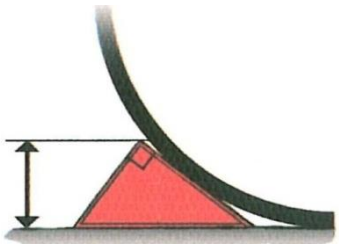

2.3 Bottom blocking

Bottom blocking preventing cargo from sliding should have a height of at least 5 cm, if the cargo is not prevented from climbing over the blocking by suitable lashings.

2.4 Supporting edge beam

In some cases fewer lashings are needed than the number of sections that are to be secured. Since each unit should be secured, the lashing effect may in these cases be spread out by supporting edge beams. For each end section one lashing should be used as well as at least one lashing per every other section.
These edge beams can be manufactured profiles or deals (minimum 25x100 mm) nailed together.

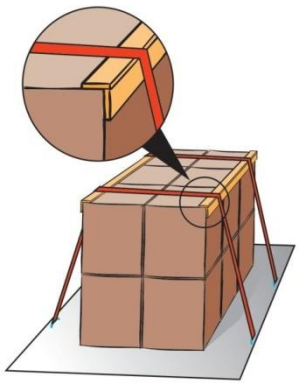

2.5 Blocking against the doors

When the door end of a CTU is designed to provide a defined wall resistance (e.g. the doors of a general cargo container) the doors may be considered as a strong cargo space boundary and used for cargo securing, provided the cargo is stowed to avoid impact loads to the door end and to prevent the cargo from falling out when the doors are opened.

2.6 Nailing

Nailing to the floor should not be done unless agreed with the CTU supplier.

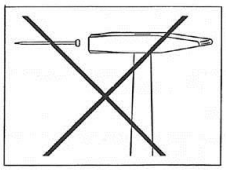

3 SLIDING – FRICTION

3.1 Different material contacts have different friction factors (μ). The table below shows recommended values for the friction factor (92.5% of the static friction). The values are valid provided that both contact surfaces are "swept clean" and free from any impurities. In case of direct lashings, where the cargo may move a little before the elongation of the lashings provides the desired restraint force, the dynamic friction applies, which should be taken as 75% of the friction factor. This effect is included in the lashing tables.

Material combination in contact surface	Friction factor μ	
	Dry	Wet
SAWN TIMBER/WOODEN PALLET		
Sawn timber/wooden pallet – fabric base laminate / plywood	0.45	0.45
Sawn timber/wooden pallet – grooved aluminium	0.4	0.4
Sawn timber/wooden pallet – stainless steel sheet	0.3	0.3
Sawn timber/wooden pallet – shrink film	0.3	0.3
PLANED WOOD		
Planed wood – fabric base laminate / plywood	0.3	0.3
Planed wood – grooved aluminium	0.25	0.25
Planed wood – stainless steel sheet	0.2	0.2
PLASTIC PALLETS		
Plastic pallet – fabric base laminate / plywood	0.2	0.2
Plastic pallet – grooved aluminium	0.15	0.15
Plastic pallet – stainless steel sheet	0.15	0.15
CARDBOARD (UNTREATED)		
Cardboard – cardboard	0.5	–
Cardboard – wooden pallet	0.5	–
BIG BAG		
Big bag – wooden pallet	0.4	–
STEEL AND SHEET METAL		
Unpainted metal with rough surface – unpainted rough metal	0.4	–
Painted metal with rough surface – painted rough metal	0.3	–
Unpainted metal with smooth surface – unpainted smooth metal	0.2	–
Painted metal with smooth surface – painted smooth metal	0.2	–
STEEL CRATES		
Steel crate – fabric base laminates / plywood	0.45	0.45
Steel crate – grooved aluminium	0.3	0.3
Steel crate – stainless steel	0.2	0.2

Material combination in contact surface	Friction factor μ	
	Dry	Wet
CONCRETE		
Concrete with rough surface – sawn timber	0.7	0.7
Concrete with smooth surface – sawn timber	0.55	0.55
ANTI–SLIP MATERIAL		
Rubber against other materials when contact surfaces are clean	0.6	0.6
Materials other than rubber against other materials	as certified	

3.2 Friction factors (μ) should be applicable to the actual conditions of transport. When a combination of contact surfaces is missing in the table above or if its friction factor cannot be verified in another way the maximum allowable friction factor of 0.3 should be used. If the surfaces are not swept clean, the maximum allowable friction factor of 0.3 or, when lower, the value in the table should be used. If the surface contacts are not free from frost, ice and snow a static friction factor of 0.2 should be used, unless the table shows a lower value. For oily and greasy surfaces or when slip sheets have been used a friction factor of 0.1 applies.*

4 TIPPING – DIMENSIONS

The dimensions **H**, **B** and **L** as indicated to the right should be used in the tables for tipping for cargo units with centres of gravity close to their geometrical centres.

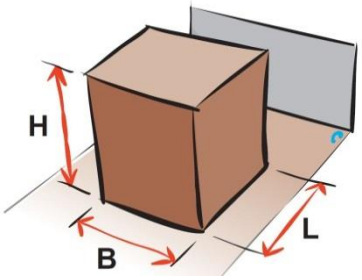

Single cargo item

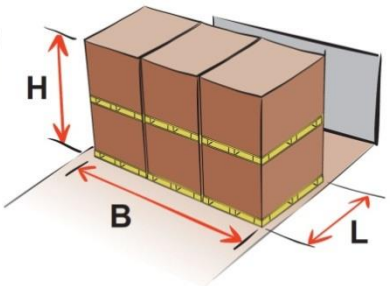

A section of a load showing 2 layers and 3 rows

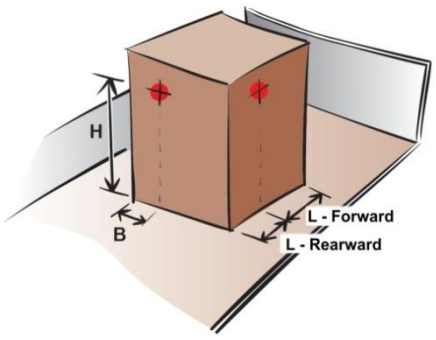

The dimensions **H**, **B** and **L** as indicated to the left should be used in the tables for tipping for cargo units with centres of gravity away from their geometrical centres.

For defining required number of lashings to prevent tipping, H/B and H/L should be calculated. The obtained values should be rounded up to the nearest higher value shown in the tables.

* For sea transport please also see CSS Code Annex 13 sub–section 7.2 *Balance of forces and moments*.

5 CARGO SECURING EQUIPMENT

5.1 Labelling

5.1.1 Cargo securing equipment may be labelled with one or more of the following quantities:

- **MSL** = Maximum Securing Load
- **LC** = Lashing Capacity (generally used for road transport in Europe)
- **S_{TF}** = Standard Tension Force = Pre-tension
- **BS** = Breaking Strength

5.1.2 The unit **daN,** where *1 daN = 1 kg*, is sometimes used to indicate the LC and S_{TF} for cargo securing equipment. BS and MSL are usually stated in **kN**, **kg** or **tonnes**.

5.2 Maximum Securing Load, MSL

5.2.1 During sea transport the cargo securing arrangements are designed with respect to the **MSL** in the equipment.

5.2.2 If labelling of MSL is missing MSL is primarily taken as LC when dimensioning according to the tables in this Quick Lashing Guide.

5.2.3 Alternatively the MSL for different types of equipment is calculated from the **BS**, according to the table below:

Equipment	**MSL**
Web lashing, reusable	50% of BS
Web lashing, single use	75% *) of BS
Chain lashing (class 8), speed lash, turnbuckle	50% of BS
Wire, new	80% of BS
Wire, used	30% of BS
Steel strapping	70% of BS
Tag washer	50% of BS
Air bag, reusable	50% of BS
Airbag, single use	75% of BS
*) Maximum 9% elongation at MSL	

5.2.4 If labelling of the pre-tension force is missing **10% of BS**, although not more than 1,000 kg, may be used as pre-tension when dimensioning according to the tables in this Quick Lashing Guide.

5.3 Lashing eyes

The lashing eyes should have at least the same strength in MSL as the lashings. For a half-loop lashing the lashing eye should have at least the strength of 1.4 × MSL of the lashing if both ends of the lashing are fixed to the same eye.

6 CONVERSION FACTORS FOR OTHER TYPES OF LASHING EQUIPMENT

6.1 For lashing equipment with MSL and pre-tension other than those shown in tables in this quick lashing guide, the table values should be multiplied by a conversion factor corresponding to the actual lashing method and type of equipment (see the table below). All values used should be taken in **daN**, where *1* ***daN*** *≈ 1* ***kg***.

Lashing method		Webbing	Chain	Steel strapping	Wire
Top-over lashing	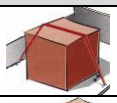	Pre-tension*/400	Pre-tension*/1,000	Pre-tension*/240	Pre-tension*/1,000
Half-loop lashing	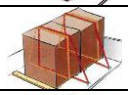	MSL*/2,000	MSL*/5,000	MSL*/1,700	MSL*/9,100
Spring lashing					
Straight lashing	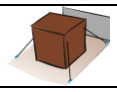				
* Pre-tension and MSL are the values for the lashing equipment intended to be used					

6.2 ***Example:*** A cargo unit is intended to be transported in Sea Area C. How many tons are prevented from sliding sideways by a pair of half-loop web lashings with MSL 4 ton, if the friction factor is 0.3?

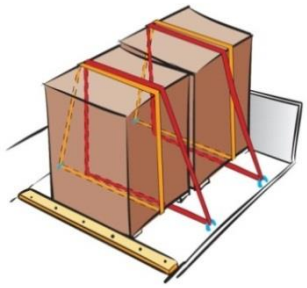

The quick lashing guide shows that a pair of half-loop **web lashings** with MSL 2,000 daN prevents 4.3 tonnes of cargo from sliding sideways in Sea Area C, when the friction factor is 0.3.

MSL for the current web lashing is 4 tonnes ≈ 4,000 daN.

6.3 According to the table above, the conversion factor for half-loop lashings is; MSL/2,000 = 4,000/2,000 = 2. The cargo mass prevented from sliding according to the lashing table should be multiplied by the conversion factor and each pair of half-loop web lashings thus prevents 2 × 4.3 = 8.6 tonnes of cargo from sliding sideways. This means that the cargo mass is prevented from sliding by a pair of half-loop lashings can be doubled when the MSL value for the lashing is doubled as long as the lashing eyes are strong enough.

7 REQUIRED NUMBER OF LASHINGS

7.1 The lashing tables in this quick lashing guide show the cargo mass in tonne (1,000 kg) prevented from sliding or tipping per lashing. The values in the tables are rounded to two significant figures.

7.2 The required number of lashings to prevent sliding and tipping should be calculated by the help of the tables on the following pages according to the following procedure:

.1 calculate the required number of lashings to prevent sliding;

.2 calculate the required number of lashings to prevent tipping;

.3 the largest number of the above should be selected

7.3 "No slide" and "no tip" indicated in the tables means that there is minimal risk of the cargo sliding or tipping respectively. Even if there is neither sliding nor tipping risk, it is recommended to always use at least one top–over lashing per every 4 tonnes of cargo or similar arrangement to avoid wandering for non–blocked cargo due to vibrations.

8 CARGO STOWED IN MORE THAN ONE LAYER

8.1 Method 1 (simple)

.1 determine the number of lashings to prevent sliding using the mass of the entire section and the lowest friction of any of the layers;

.2 determine the number of lashings to prevent tipping;

.3 the largest number of lashings in step 1 and 2 should be used.

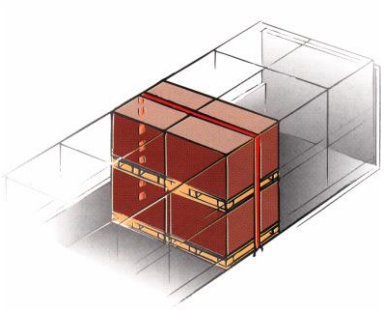

8.2 Method 2 (advanced)

.1 determine the number of lashings to prevent sliding using the mass of the entire section and the friction for the bottom layer;

.2 determine the number of lashings to prevent sliding using the mass of the section's upper layer and the friction between the layers;

.3 determine the number of lashings for the entire section which is required to prevent tipping;

.4 the largest number of lashings in steps 1 to 3 should be used.

9 ALTERNATIVE METHODS

Nothing in the CTU Code should be interpreted as specifying that a particular securing method should be used. Proven alternatives for securing cargo within containers, such as a properly applied adhesive–based fabric restraint system (see figure below) already exist and future innovations and advances in technology may also result in other suitable methods, providing an equivalent means of cargo securing, being developed. In all cases in which patent systems are used, however, it is important to realize that the systems can only be fully effective when properly applied as designed in full conformance with manufacturer's instructions.

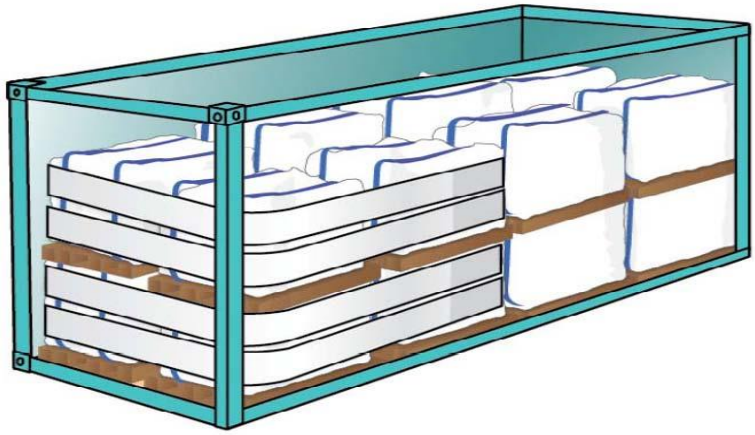

10. QUICK LASHING GUIDE A

Cargo securing on CTUs for transports on Road, Combined Rail and in Sea Area A

10.1 General Remarks

10.1.1 Accelerations to be expected expressed in parts of the gravity acceleration (1g = 9.81 m/s^2).

Transport mode/ Sea area	Sideways		Forward		Backward	
	S	V	F	V	B	V
Road	0.5	1.0	0.8	1.0	0.5	1.0
Combined Rail	0.5	1.0	0.5	1.0	0.5	1.0
Sea Area A	0.5	1.0	0.3	0.5	0.3	0.5

V = Vertical acceleration to be used in combination with horizontal accelerations; S Sideways, F Forward and B Backward.

10.1.2 Goods not rigid in form

If the goods are not rigid in form, more lashings than stipulated in this quick lashing guide could be required.

10.1.3 Sideways, forward and backward refers to a fore–and–aft stowed CTU.

10.2 WEBBING

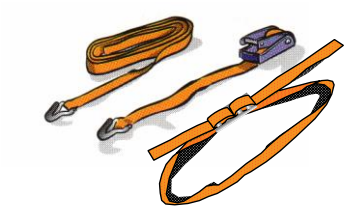

10.2.1 Top–over lashings

The tables are valid for **webbing** with an MSL of 20 kN or 2,000 daN – (2,000 kg = 2 tonnes) and a pre-tension of minimum 4 kN or 400 daN – (400 kg).

The values in the tables are proportional to the pre-tension in the lashings.

The masses in the tables are valid for one top-over lashing.

TOP-OVER LASHING

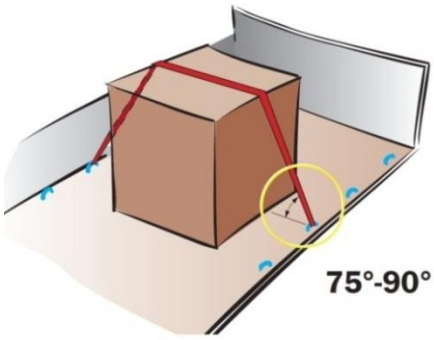

Cargo mass in tonnes prevented from sliding *per top–over lashing*			
μ	**SIDEWAYS**	**FORWARD**	**BACKWARD**
0.00	0.00	0.00	0.00
0.05	0.08	0.05	0.08
0.10	0.18	0.10	0.18
0.15	0.30	0.16	0.30
0.20	0.47	0.24	0.47
0.25	0.71	0.32	0.71
0.30	1.1	0.43	1.1
0.35	1.7	0.55	1.7
0.40	2.8	0.71	2.8
0.45	6.4	0.91	4.3
0.50	no slide	1.2	7.1
0.55	no slide	1.6	16
0.60	no slide	2.1	no slide
0.65	no slide	3.1	no slide
0.70	no slide	5.0	no slide

Cargo mass in tonnes prevented from tipping *per top–over lashing*								
SIDEWAYS						**FORWARD**	**BACKWARD**	
H/B	**1 row**	**2 rows**	**3 rows**	**4 rows**	**5 rows**	**H/L**	**per section**	**per section**
0.6	no tip	no tip	no tip	6.3	2.9	0.6	no tip	no tip
0.8	no tip	no tip	5.4	2.1	1.4	0.8	no tip	no tip
1.0	no tip	no tip	2.2	1.3	0.96	1.0	no tip	no tip
1.2	no tip	4.5	1.3	0.90	0.72	1.2	no tip	no tip
1.4	no tip	2.2	0.98	0.70	0.58	1.4	5.9	no tip
1.6	no tip	1.5	0.77	0.57	0.48	1.6	2.5	no tip
1.8	no tip	1.1	0.63	0.48	0.41	1.8	1.6	18
2.0	no tip	0.89	0.54	0.42	0.36	2.0	1.2	7.1
2.2	7.1	0.74	0.47	0.37	0.32	2.2	0.93	4.4
2.4	3.5	0.64	0.41	0.33	0.29	2.4	0.77	3.2
2.6	2.4	0.56	0.37	0.30	0.26	2.6	0.66	2.4
2.8	1.8	0.50	0.34	0.27	0.24	2.8	0.57	1.8
3.0	1.4	0.45	0.31	0.25	0.22	3.0	0.51	1.4

10.2 WEBBING



10.2.2 Half-loop lashings

The tables are valid for **webbing** with an MSL of 20 kN or 2,000 daN – (2,000 kg = 2 tonnes) and a pre-tension of minimum 4 kN or 400 daN – (400 kg).

The masses in the tables below are valid for one pair of half-loop lashings.

The values in the tables are proportional to the maximum securing load (MSL) in the lashings.

HALF-LOOP LASHING

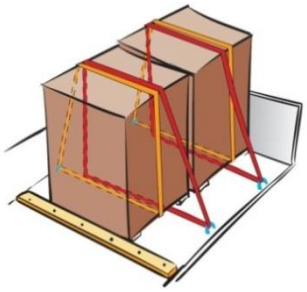

Cargo mass in tonnes prevented from sliding *per pair of half-loop lashing*	
μ	**SIDEWAYS**
0.00	4.1
0.05	4.6
0.10	5.2
0.15	5.9
0.20	6.7
0.25	7.7
0.30	9.1
0.35	11
0.40	13
0.45	17
0.50	no slide
0.55	no slide
0.60	no slide
0.65	no slide
0.70	no slide

Cargo mass in tonnes prevented from tipping *per pair of half-loop lashing*					
SIDEWAYS					
H/B	**1 row**	**2 rows**	**3 rows**	**4 rows**	**5 rows**
0.6	no tip	no tip	no tip	18	8.2
0.8	no tip	no tip	15	5.9	4.1
1.0	no tip	no tip	6.1	3.6	2.7
1.2	no tip	13	3.8	2.5	2.0
1.4	no tip	6.4	2.8	2.0	1.6
1.6	no tip	4.2	2.2	1.6	1.4
1.8	no tip	3.2	1.8	1.4	1.2
2.0	no tip	2.5	1.5	1.2	1.0
2.2	20	2.1	1.3	1.0	0.91
2.4	10	1.8	1.2	0.94	0.82
2.6	6.8	1.6	1.1	0.85	0.74
2.8	5.1	1.4	0.96	0.78	0.68
3.0	4.1	1.3	0.87	0.71	0.63

10.2 WEBBING

10.2.3 Straight lashings

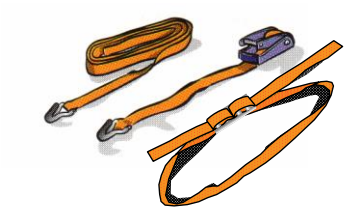

The tables are valid for **webbing** with an MSL of 20 kN or 2,000 daN – (2,000 kg = 2 tonnes) and a pre-tension of minimum 4 kN or 400 daN – (400 kg).

All masses are valid for one straight lashing.

The values in the tables are proportional to the maximum securing load (MSL) in the lashings.

STRAIGHT LASHING

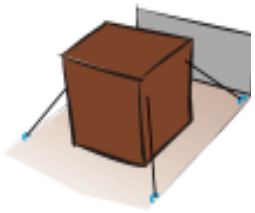

Cargo mass in tonnes prevented from sliding *per straight lashing*			
μ	**SIDEWAYS per side**	**FORWARD**	**BACKWARD**
0.00	1.0	0.64	1.0
0.05	1.2	0.76	1.2
0.10	1.5	0.89	1.5
0.15	1.8	1.0	1.8
0.20	2.2	1.2	2.2
0.25	2.7	1.4	2.7
0.30	3.3	1.6	3.3
0.35	4.1	1.8	4.1
0.40	5.2	2.1	5.2
0.45	6.8	2.4	6.8
0.50	no slide	2.8	10
0.55	no slide	3.2	13
0.60	no slide	3.7	no slide
0.65	no slide	4.4	no slide
0.70	no slide	5.2	no slide

Cargo mass in tonnes prevented from tipping *per straight lashing*				
H/B	**SIDEWAYS per side**	**H/L**	**FORWARD**	**BACKWARD**
0.6	no tip	**0.6**	no tip	no tip
0.8	no tip	**0.8**	no tip	no tip
1.0	no tip	**1.0**	no tip	no tip
1.2	no tip	**1.2**	no tip	no tip
1.4	no tip	**1.4**	10	no tip
1.6	no tip	**1.6**	4.7	no tip
1.8	no tip	**1.8**	3.2	36
2.0	no tip	**2.0**	2.5	15
2.2	16	**2.2**	2.1	10
2.4	8.7	**2.4**	1.9	7.9
2.6	6.1	**2.6**	1.7	6.1
2.8	4.8	**2.8**	1.6	4.8
3.0	4.1	**3.0**	1.5	4.1

10.2 WEBBING

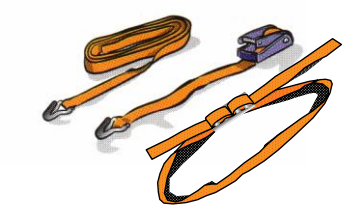

10.2.4 Spring lashings

The tables are valid for **webbing** with an MSL of 20 kN or 2,000 daN – (2,000 kg = 2 tonnes) and a pre-tension of minimum 4 kN or 400 daN – (400 kg).

The masses in the tables are valid for one spring lashing.

The values in the tables are proportional to the maximum securing load (MSL) in the lashings.

SPRING LASHING



Cargo mass in tonnes prevented from sliding *per spring lashing*		
μ	**FORWARD**	**BACKWARD**
0.00	3.6	5.8
0.05	3.9	6.5
0.10	4.3	7.3
0.15	4.7	8.3
0.20	5.1	9.5
0.25	5.6	11
0.30	6.1	13
0.35	6.8	15
0.40	7.5	19
0.45	8.3	24
0.50	9.3	35
0.55	11	43
0.60	12	no slide
0.65	14	no slide
0.70	16	no slide

Cargo mass in tonnes prevented from tipping *per spring lashing*		
H/L	**FORWARD**	**BACKWARD**
0.6	no tip	no tip
0.8	no tip	no tip
1.0	no tip	no tip
1.2	no tip	no tip
1.4	67	no tip
1.6	33	no tip
1.8	24	259
2.0	19	115
2.2	17	79
2.4	15	63
2.6	14	50
2.8	13	40
3.0	12	35

10.3 TAG WASHERS AND NAILS

TAG WASHER



Approximate cargo mass in tonnes prevented from sliding by one tag washer for wood on wood in combination with top-over lashing only

μ**	SIDEWAYS						
	∅ 48	∅ 62	∅ 75	∅ 95	30×57	48×65	130×130
BS(ton)	**0.5**	**0.7**	**0.9**	**1.2**	**0.5**	**0.7**	**1.5**
0.10	0.31	0.44	0.56	0.75	0.31	0.44	0.94
0.20	0.42	0.58	0.75	1.00	0.42	0.58	1.3
0.30	0.63	0.88	1.1	1.5	0.63	0.88	1.9
	FORWARD						
0.10	0.18	0.25	0.32	0.43	0.18	0.25	0.54
0.20	0.21	0.29	0.38	0.50	0.21	0.29	0.63
0.30	0.25	0.35	0.45	0.60	0.25	0.35	0.75
	BACKWARD						
0.10	0.31	0.44	0.56	0.75	0.31	0.44	0.94
0.20	0.42	0.58	0.75	1.00	0.42	0.58	1.3
0.30	0.63	0.88	1.1	1.5	0.63	0.88	1.9

** Between tag washer and platform bed/cargo.

4 in (100 mm) – NAIL
Approximate cargo mass in tonnes prevented from sliding by one nail

μ***	SIDEWAYS per side		FORWARD		BACKWARD	
	blank	galvanised	blank	galvanised	blank	Galvanised
BS (ton)	**0.22**	**0.32**	**0.22**	**0.32**	**0.22**	**0.32**
0.00	0.22	0.32	0.14	0.20	0.22	0.32
0.05	0.24	0.36	0.15	0.21	0.24	0.36
0.10	0.28	0.40	0.16	0.23	0.28	0.40
0.15	0.31	0.46	0.17	0.25	0.31	0.46
0.20	0.37	0.53	0.18	0.27	0.37	0.53
0.25	0.44	0.64	0.20	0.29	0.44	0.64
0.30	0.55	0.80	0.22	0.32	0.55	0.80
0.35	0.73	1.1	0.24	0.36	0.73	1.1
0.40	1.1	1.6	0.28	0.40	1.1	1.6
0.45	2.2	3.2	0.31	0.46	1.5	2.1
0.50	no slide	no slide	0.37	0.53	2.2	3.2
0.55	no slide	no slide	0.44	0.64	4.4	6.4
0.60	no slide	no slide	0.55	0.80	no slide	no slide
0.65	no slide	no slide	0.73	1.1	no slide	no slide
0.70	no slide	no slide	1.1	1.6	no slide	no slide

*** Between cargo and platform bed.

11. QUICK LASHING GUIDE B

Cargo securing on CTUs for transports on Road, Combined Rail and in Sea Area B

11.1 General Remarks

11.1.1 Accelerations to be expected expressed in parts of the gravity acceleration (1g = 9.81 m/s^2).

Transport mode/ Sea area	Sideways		Forward		Backward	
	S	V	F	V	B	V
Road	0.5	1.0	0.8	1.0	0.5	1.0
Combined Rail	0.5	1.0	0.5	1.0	0.5	1.0
Sea Area B	0.7	1.0	0.3	0.3	0.3	0.3

V = Vertical acceleration to be used in combination with horizontal accelerations; S Sideways, F Forward and B Backward.

11.1.2 Goods not rigid in form

If the goods are not rigid in form, more lashings than stipulated in this quick lashing guide could be required.

11.1.3 Sideways, forward and backward refers to a fore–and–aft stowed CTU.

11.2 WEBBING

11.2.1 Top–over lashings

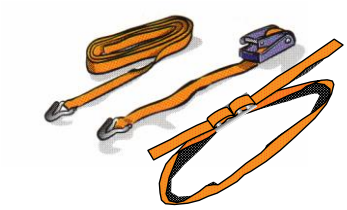

TOP–OVER LASHING

The tables are valid for **webbing** with an MSL of 20 kN or 2,000 daN – (2,000 kg = 2 tonnes) and a pre-tension of minimum 4 kN or 400 daN – (400 kg).

The values in the tables are proportional to the pre-tension in the lashings.

The masses in the tables are valid for one top-over lashing.

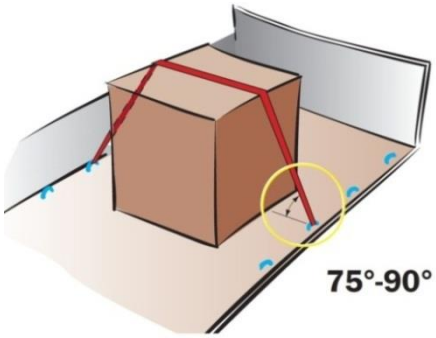

Cargo mass in tonnes prevented from sliding *per top-over lashing*			
μ	**SIDEWAYS**	**FORWARD**	**BACKWARD**
0.00	0.00	0.00	0.00
0.05	0.05	0.05	0.08
0.10	0.12	0.10	0.18
0.15	0.19	0.16	0.30
0.20	0.28	0.24	0.47
0.25	0.39	0.32	0.71
0.30	0.53	0.43	1.0
0.35	0.71	0.55	1.3
0.40	0.95	0.71	1.6
0.45	1.3	0.91	1.9
0.50	1.8	1.2	2.4
0.55	2.6	1.6	2.9
0.60	4.3	2.1	3.5
0.65	9.2	3.1	4.4
0.70	no slide	5.0	5.5

Cargo mass in tonnes prevented from tipping *per top-over lashing*								
SIDEWAYS							**FORWARD**	**BACKWARD**
H/B	**1 row**	**2 rows**	**3 rows**	**4 rows**	**5 rows**	**H/L**	**per section**	**per section**
0.6	no tip	no tip	4.1	1.9	1.3	**0.6**	no tip	no tip
0.8	no tip	7.4	1.6	1.0	0.80	**0.8**	no tip	no tip
1.0	no tip	2.2	0.98	0.70	0.58	**1.0**	no tip	no tip
1.2	no tip	1.3	0.71	0.53	0.45	**1.2**	12	12
1.4	no tip	0.93	0.55	0.43	0.37	**1.4**	5.9	5.9
1.6	5.9	0.72	0.46	0.36	0.31	**1.6**	2.5	3.9
1.8	2.7	0.59	0.39	0.31	0.27	**1.8**	1.6	3.0
2.0	1.8	0.50	0.34	0.27	0.24	**2.0**	1.2	2.4
2.2	1.3	0.43	0.30	0.24	0.22	**2.2**	0.93	2.0
2.4	1.0	0.38	0.27	0.22	0.19	**2.4**	0.77	1.7
2.6	0.86	0.34	0.24	0.20	0.18	**2.6**	0.66	1.5
2.8	0.74	0.31	0.22	0.18	0.16	**2.8**	0.57	1.3
3.0	0.64	0.28	0.20	0.17	0.15	**3.0**	0.51	1.2

11.2 WEBBING



11.2.2 Half-loop lashings

The tables are valid for **webbing** with an MSL of 20 kN or 2,000 daN – (2,000 kg = 2 tonnes) and a pre-tension of minimum 4 kN or 400 daN – (400 kg).

The masses in the tables below are valid for one pair of half-loop lashings.

The values in the tables are proportional to the maximum securing load (MSL) in the lashings.

HALF-LOOP LASHING

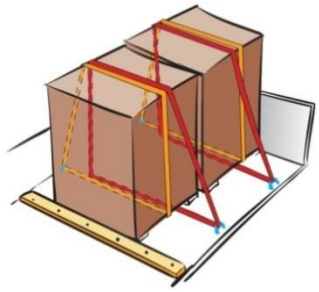

Cargo mass in tonnes prevented from sliding *per pair of half-loop lashing*	
μ	**SIDEWAYS**
0.00	2.9
0.05	3.2
0.10	3.5
0.15	3.9
0.20	4.3
0.25	4.7
0.30	5.3
0.35	5.9
0.40	6.6
0.45	7.5
0.50	8.6
0.55	10
0.60	12
0.65	14
0.70	no slide

Cargo mass in tonnes prevented from tipping *per pair of half-loop lashing*					
SIDEWAYS					
H/B	**1 row**	**2 rows**	**3 rows**	**4 rows**	**5 rows**
0.6	no tip	no tip	12	5.2	3.7
0.8	no tip	21	4.5	2.9	2.3
1.0	no tip	6.4	2.8	2.0	1.6
1.2	no tip	3.7	2.0	1.5	1.3
1.4	no tip	2.7	1.6	1.2	1.0
1.6	17	2.1	1.3	1.0	0.89
1.8	7.8	1.7	1.1	0.88	0.77
2.0	5.1	1.4	0.96	0.78	0.68
2.2	3.8	1.2	0.84	0.69	0.61
2.4	3.0	1.1	0.76	0.62	0.55
2.6	2.5	0.97	0.69	0.57	0.50
2.8	2.1	0.87	0.63	0.52	0.46
3.0	1.9	0.80	0.58	0.48	0.43

11.2 WEBBING



11.2.3 Straight lashings

The tables are valid for **webbing** with an MSL of 20 kN or 2,000 daN – (2,000 kg = 2 tonnes) and a pre-tension of minimum 4 kN or 400 daN – (400 kg).

All masses are valid for one straight lashing.

The values in the tables are proportional to the maximum securing load (MSL) in the lashings.

STRAIGHT LASHING

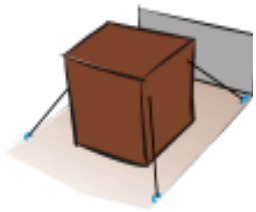

Cargo mass in tonnes prevented from sliding *per straight lashing*			
μ	**SIDEWAYS per side**	**FORWARD**	**BACKWARD**
0.00	0.73	0.64	1.0
0.05	0.87	0.76	1.2
0.10	1.0	0.89	1.5
0.15	1.2	1.0	1.8
0.20	1.4	1.2	2.2
0.25	1.6	1.4	2.7
0.30	1.9	1.6	3.3
0.35	2.2	1.8	4.1
0.40	2.6	2.1	4.9
0.45	3.0	2.4	5.6
0.50	3.6	2.8	6.2
0.55	4.3	3.2	7.0
0.60	5.2	3.7	7.9
0.65	6.4	4.4	8.9
0.70	no slide	5.2	10.0

Cargo mass in tonnes prevented from tipping *per straight lashing*				
H/B	**SIDEWAYS per side**	**H/L**	**FORWARD**	**BACKWARD**
0.6	no tip	**0.6**	no tip	no tip
0.8	no tip	**0.8**	no tip	no tip
1.0	no tip	**1.0**	no tip	no tip
1.2	no tip	**1.2**	19	19
1.4	no tip	**1.4**	10	10
1.6	11	**1.6**	4.7	7.4
1.8	5.5	**1.8**	3.2	5.9
2.0	3.8	**2.0**	2.5	5.1
2.2	3.0	**2.2**	2.1	4.5
2.4	2.5	**2.4**	1.9	4.1
2.6	2.2	**2.6**	1.7	3.8
2.8	2.0	**2.8**	1.6	3.6
3.0	1.9	**3.0**	1.5	3.4

11.2 WEBBING

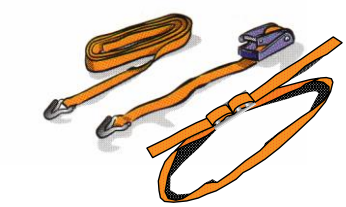

11.2.4 Spring lashings

The tables are valid for **webbing** with an MSL of 20 kN or 2,000 daN – (2,000 kg = 2 tonnes) and a pre-tension of minimum 4 kN or 400 daN – (400 kg).

The masses in the tables are valid for one spring lashing.

The values in the tables are proportional to the maximum securing load (MSL) in the lashings.

SPRING LASHING



Cargo mass in tonnes prevented from sliding *per spring lashing*		
μ	**FORWARD**	**BACKWARD**
0.00	3.6	5.8
0.05	3.9	6.5
0.10	4.3	7.3
0.15	4.7	8.3
0.20	5.1	9.5
0.25	5.6	11
0.30	6.1	13
0.35	6.8	15
0.40	7.5	18
0.45	8.3	19
0.50	9.3	21
0.55	11	23
0.60	12	25
0.65	14	28
0.70	16	31

Cargo mass in tonnes prevented from tipping *per spring lashing*		
H/L	**FORWARD**	**BACKWARD**
0.6	no tip	no tip
0.8	no tip	no tip
1.0	no tip	no tip
1.2	115	115
1.4	67	67
1.6	33	51
1.8	24	43
2.0	19	38
2.2	17	35
2.4	15	33
2.6	14	31
2.8	13	30
3.0	12	29

11.3 CHAIN

11.3.1 Top-over lashings



The tables are valid for **chain (∅ 9 mm, class 8)** with an MSL of 50 kN or 5,000 daN – (5,000 kg = 5 tonnes) and a pre-tension of minimum 10 kN or 1,000 daN – (1,000 kg = 1 tonne).

The values in the tables are proportional to the pre-tension in the lashings.

The masses in the tables are valid for one top-over lashing.

TOP–OVER LASHING

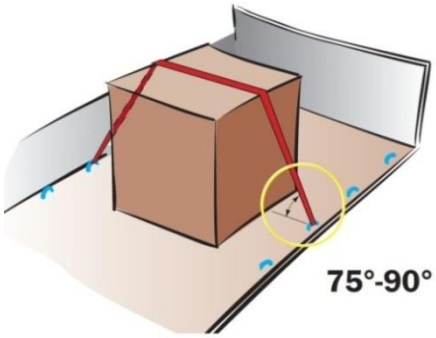

Cargo mass in tonnes prevented from sliding *per top–over lashing*			
μ	**SIDEWAYS**	**FORWARD**	**BACKWARD**
0.00	0.00	0.00	0.00
0.05	0.14	0.12	0.20
0.10	0.30	0.25	0.44
0.15	0.48	0.41	0.76
0.20	0.71	0.59	1.2
0.25	0.98	0.81	1.8
0.30	1.3	1.1	2.5
0.35	1.8	1.4	3.2
0.40	2.4	1.8	3.9
0.45	3.2	2.3	4.8
0.50	4.4	3.0	5.9
0.55	6.5	3.9	7.2
0.60	11	5.3	8.9
0.65	23	7.7	11
0.70	no slide	12	14

Cargo mass in tonnes prevented from tipping *per top–over lashing*								
SIDEWAYS						**FORWARD**	**BACKWARD**	
H/B	**1 row**	**2 rows**	**3 rows**	**4 rows**	**5 rows**	**H/L**	**per section**	**per section**
0.6	no tip	no tip	10	4.6	3.3	**0.6**	no tip	no tip
0.8	no tip	19	4.0	2.5	2.0	**0.8**	no tip	no tip
1.0	no tip	5.6	2.4	1.7	1.4	**1.0**	no tip	no tip
1.2	no tip	3.3	1.8	1.3	1.1	**1.2**	30	30
1.4	no tip	2.3	1.4	1.1	0.92	**1.4**	15	15
1.6	15	1.8	1.1	0.90	0.78	**1.6**	6.3	9.8
1.8	6.8	1.5	0.97	0.78	0.68	**1.8**	4.0	7.4
2.0	4.4	1.2	0.84	0.68	0.60	**2.0**	3.0	5.9
2.2	3.3	1.1	0.74	0.61	0.54	**2.2**	2.3	4.9
2.4	2.6	0.95	0.67	0.55	0.49	**2.4**	1.9	4.2
2.6	2.2	0.85	0.60	0.50	0.45	**2.6**	1.6	3.7
2.8	1.8	0.76	0.55	0.46	0.41	**2.8**	1.4	3.3
3.0	1.6	0.70	0.51	0.43	0.38	**3.0**	1.3	3.0

11.3 CHAIN



11.3.2 Half-loop lashings

The tables are valid for **chain (∅ 9 mm, class 8)** with an MSL of 50 kN or 5,000 daN – (5,000 kg = 5 tonnes) and a pre-tension of minimum 10 kn or 1,000 daN – (1,000 kg = 1 tonne).

The masses in the tables below are valid for one pair of half-loop lashings.

The values in the tables are proportional to the maximum securing load (MSL) in the lashings.

HALF-LOOP LASHING

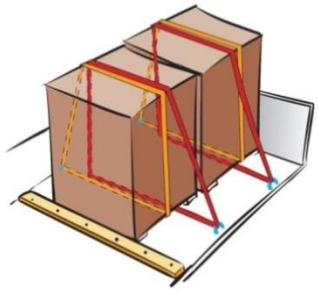

Cargo mass in tonnes prevented from sliding *per pair of half-loop lashing*	
μ	**SIDEWAYS**
0.00	7.3
0.05	8.0
0.10	8.8
0.15	9.7
0.20	11
0.25	12
0.30	13
0.35	15
0.40	17
0.45	19
0.50	22
0.55	25
0.60	30
0.65	36
0.70	no slide

Cargo mass in tonnes prevented from tipping *per pair of half-loop lashing*					
SIDEWAYS					
H/B	**1 row**	**2 rows**	**3 rows**	**4 rows**	**5 rows**
0.6	no tip	no tip	29	13	9.3
0.8	no tip	53	11	7.2	5.7
1.0	no tip	16	7.0	5.0	4.1
1.2	no tip	9.4	5.0	3.8	3.2
1.4	no tip	6.6	3.9	3.1	2.6
1.6	42	5.1	3.2	2.6	2.2
1.8	20	4.2	2.8	2.2	1.9
2.0	13	3.5	2.4	1.9	1.7
2.2	9.4	3.1	2.1	1.7	1.5
2.4	7.5	2.7	1.9	1.6	1.4
2.6	6.2	2.4	1.7	1.4	1.3
2.8	5.3	2.2	1.6	1.3	1.2
3.0	4.6	2.0	1.4	1.2	1.1

11.3 CHAIN



11.3.3 Straight lashings

The tables are valid for **chain (∅ 9 mm, class 8)** with an MSL of 50 kN or 5,000 daN – (5,000 kg = 5 tonnes) and a pre-tension of minimum 10 kN or 1,000 daN – (1,000 kg = 1 tonne).

All masses are valid for one straight lashing.

The values in the tables are proportional to the maximum securing load (MSL) in the lashings.

STRAIGHT LASHING

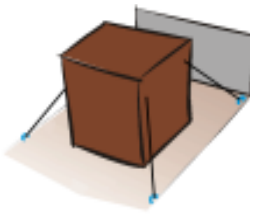

Cargo mass in tonnes prevented from sliding *per straight lashing*			
μ	**SIDEWAYS per side**	**FORWARD**	**BACKWARD**
0.00	1.8	1.6	2.5
0.05	2.2	1.9	3.1
0.10	2.6	2.2	3.8
0.15	3.0	2.6	4.6
0.20	3.5	3.0	5.5
0.25	4.1	3.4	6.7
0.30	4.8	3.9	8.2
0.35	5.6	4.5	10
0.40	6.5	5.2	12
0.45	7.6	6.0	14
0.50	9.0	6.9	16
0.55	11	8.0	18
0.60	13	9.3	20
0.65	16	11	22
0.70	no slide	13	25

Cargo mass in tonnes prevented from tipping *per straight lashing*				
H/B	**SIDEWAYS per side**	**H/L**	**FORWARD**	**BACKWARD**
0.6	no tip	**0.6**	no tip	no tip
0.8	no tip	**0.8**	no tip	no tip
1.0	no tip	**1.0**	no tip	no tip
1.2	no tip	**1.2**	47	47
1.4	no tip	**1.4**	25	25
1.6	28	**1.6**	12	18
1.8	14	**1.8**	8.1	15
2.0	9.6	**2.0**	6.4	13
2.2	7.6	**2.2**	5.4	11
2.4	6.4	**2.4**	4.7	10
2.6	5.6	**2.6**	4.2	9.6
2.8	5.0	**2.8**	3.9	9.0
3.0	4.6	**3.0**	3.6	8.5

11.3 CHAIN



11.3.4 Spring lashings

The tables are valid for **chain (∅ 9 mm, class 8)** with an MSL of 50kN or 5,000 daN – (5,000 kg = 5 tonnes) and a pre-tension of minimum 10 kN or 1,000 daN – (1,000 kg = 1 tonne).

The masses in the tables are valid for one spring lashing.

The values in the tables are proportional to the maximum securing load (MSL) in the lashings.

SPRING LASHING



Cargo mass in tonnes prevented from sliding *per spring lashing*		
μ	**FORWARD**	**BACKWARD**
0.00	9.0	14
0.05	9.8	16
0.10	11	18
0.15	12	21
0.20	13	24
0.25	14	27
0.30	15	32
0.35	17	38
0.40	19	45
0.45	21	49
0.50	23	53
0.55	26	58
0.60	30	63
0.65	34	70
0.70	40	77

Cargo mass in tonnes prevented from tipping *per spring lashing*		
H/L	**FORWARD**	**BACKWARD**
0.6	no tip	no tip
0.8	no tip	no tip
1.0	no tip	no tip
1.2	288	288
1.4	168	168
1.6	82	128
1.8	59	108
2.0	48	96
2.2	42	88
2.4	38	82
2.6	35	78
2.8	33	75
3.0	31	72

11.4 STEEL STRAPPING

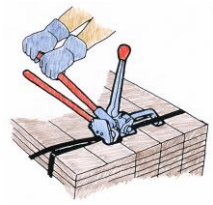

11.4.1 Top–over lashings

The tables are valid for **steel strapping** (**32 × 0.8 mm)** with an MSL of 17 kN or 1,700 daN – (1,700 kg = 1.7 tonnes) and a pre-tension of minimum 2.4 kN or 240 daN – (240 kg).

The values in the tables are proportional to the pre-tension in the lashings.

The masses in the tables are valid for one top-over lashing.

TOP-OVER LASHING

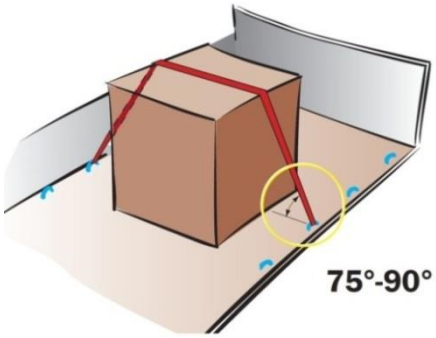

Cargo mass in tonnes prevented from sliding *per top-over lashing*			
μ	**SIDEWAYS**	**FORWARD**	**BACKWARD**
0.00	0.00	0.00	0.00
0.05	0.03	0.03	0.05
0.10	0.07	0.06	0.11
0.15	0.12	0.10	0.18
0.20	0.17	0.14	0.28
0.25	0.24	0.19	0.43
0.30	0.32	0.26	0.61
0.35	0.43	0.33	0.76
0.40	0.57	0.43	0.95
0.45	0.77	0.55	1.2
0.50	1.1	0.71	1.4
0.55	1.6	0.94	1.7
0.60	2.6	1.3	2.1
0.65	5.5	1.8	2.6
0.70	no slide	3.0	3.3

Cargo mass in tonnes prevented from tipping *per top-over lashing*								
SIDEWAYS							**FORWARD**	**BACKWARD**
H/B	**1 row**	**2 rows**	**3 rows**	**4 rows**	**5 rows**	**H/L**	**per section**	**per section**
0.6	no tip	no tip	2.5	1.1	0.79	**0.6**	no tip	no tip
0.8	no tip	4.5	0.95	0.61	0.48	**0.8**	no tip	no tip
1.0	no tip	1.3	0.59	0.42	0.35	**1.0**	no tip	no tip
1.2	no tip	0.79	0.42	0.32	0.27	**1.2**	7.1	7.1
1.4	no tip	0.56	0.33	0.26	0.22	**1.4**	3.5	3.5
1.6	3.5	0.43	0.27	0.22	0.19	**1.6**	1.5	2.4
1.8	1.6	0.35	0.23	0.19	0.16	**1.8**	0.97	1.8
2.0	1.1	0.30	0.20	0.16	0.14	**2.0**	0.71	1.4
2.2	0.79	0.26	0.18	0.15	0.13	**2.2**	0.56	1.2
2.4	0.63	0.23	0.16	0.13	0.12	**2.4**	0.46	1.0
2.6	0.52	0.20	0.14	0.12	0.11	**2.6**	0.39	0.89
2.8	0.44	0.18	0.13	0.11	0.10	**2.8**	0.34	0.79
3.0	0.39	0.17	0.12	0.10	0.09	**3.0**	0.30	0.71

11.4 STEEL STRAPPING

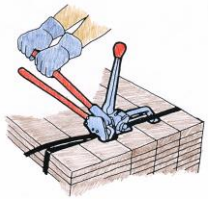

11.4.2 Half-loop lashings

The tables are valid for **steel strapping** (**32 × 0.8 mm)** with an MSL of 17 kN or 1,700 daN – (1,700 kg = 1.7 tonnes) and a pre-tension of minimum 2.4 kN or 240 daN – (240 kg).

The masses in the tables below are valid for one pair of half-loop lashings.

The values in the tables are proportional to the maximum securing load (BS) in the lashings.

HALF-LOOP LASHING

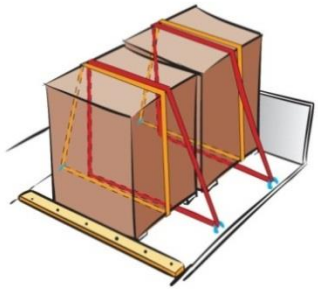

Cargo mass in tonnes prevented from sliding *per pair of half-loop lashing*	
μ	**SIDEWAYS**
0.00	2.5
0.05	2.7
0.10	3.0
0.15	3.3
0.20	3.6
0.25	4.0
0.30	4.5
0.35	5.0
0.40	5.6
0.45	6.4
0.50	7.3
0.55	8.5
0.60	10
0.65	12
0.70	no slide

Cargo mass in tonnes prevented from tipping *per pair of half-loop lashing*					
SIDEWAYS					
H/B	**1 row**	**2 rows**	**3 rows**	**4 rows**	**5 rows**
0.6	no tip	no tip	10.0	4.5	3.2
0.8	no tip	18	3.8	2.4	1.9
1.0	no tip	5.4	2.4	1.7	1.4
1.2	no tip	3.2	1.7	1.3	1.1
1.4	no tip	2.3	1.3	1.0	0.89
1.6	14	1.7	1.1	0.87	0.75
1.8	6.7	1.4	0.94	0.75	0.65
2.0	4.3	1.2	0.81	0.66	0.58
2.2	3.2	1.0	0.72	0.59	0.52
2.4	2.5	0.92	0.64	0.53	0.47
2.6	2.1	0.82	0.58	0.48	0.43
2.8	1.8	0.74	0.53	0.44	0.39
3.0	1.6	0.68	0.49	0.41	0.36

11.4 STEEL STRAPPING

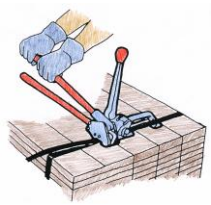

11.4.3 Straight lashings

The tables are valid for **steel strapping** (**32 × 0.8 mm)** with an MSL of 17 kN or 1,700 daN – (1,700 kg = 1.7 tonnes) and a pre-tension of minimum 2.4 kN or 240 daN – (240 kg).

All masses are valid for one straight lashing.

The values in the tables are proportional to the maximum securing load (MSL) in the lashings.

STRAIGHT LASHING

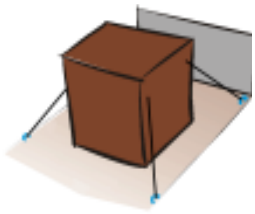

Cargo mass in tonnes prevented from sliding *per straight lashing*			
μ	**SIDEWAYS per side**	**FORWARD**	**BACKWARD**
0.00	0.62	0.54	0.87
0.05	0.74	0.64	1.1
0.10	0.87	0.75	1.3
0.15	1.0	0.88	1.6
0.20	1.2	1.0	1.9
0.25	1.4	1.2	2.3
0.30	1.6	1.3	2.8
0.35	1.9	1.5	3.5
0.40	2.2	1.8	4.2
0.45	2.6	2.0	4.7
0.50	3.1	2.3	5.3
0.55	3.7	2.7	6.0
0.60	4.4	3.2	6.7
0.65	5.5	3.7	7.6
0.70	no slide	4.4	8.5

Cargo mass in tonnes prevented from tipping *per straight lashing*				
H/B	**SIDEWAYS per side**	**H/L**	**FORWARD**	**BACKWARD**
0.6	no tip	**0.6**	no tip	no tip
0.8	no tip	**0.8**	no tip	no tip
1.0	no tip	**1.0**	no tip	no tip
1.2	no tip	**1.2**	16	16
1.4	no tip	**1.4**	8.7	8.7
1.6	9.4	**1.6**	4.0	6.3
1.8	4.7	**1.8**	2.8	5.1
2.0	3.2	**2.0**	2.2	4.3
2.2	2.6	**2.2**	1.8	3.9
2.4	2.2	**2.4**	1.6	3.5
2.6	1.9	**2.6**	1.4	3.2
2.8	1.7	**2.8**	1.3	3.0
3.0	1.6	**3.0**	1.2	2.9

11.4 STEEL STRAPPING

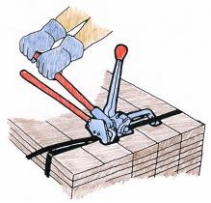

11.4.4 Spring lashings

The tables are valid for **steel strapping** (**32 × 0.8 mm)** with an MSL of 17 kN or 1,700 daN – (1,700 kg = 1.7 tonnes) and a pre-tension of minimum 2.4 kN or 240 daN – (240 kg).

The masses in the tables are valid for one spring lashing.

The values in the tables are proportional to the maximum securing load (MSL) in the lashings.

SPRING LASHING



Cargo mass in tonnes prevented from sliding *per spring lashing*		
μ	**FORWARD**	**BACKWARD**
0.00	3.1	4.9
0.05	3.3	5.5
0.10	3.6	6.2
0.15	4.0	7.0
0.20	4.3	8.1
0.25	4.8	9.3
0.30	5.2	11
0.35	5.8	13
0.40	6.4	15
0.45	7.1	16
0.50	7.9	18
0.55	8.9	20
0.60	10	22
0.65	12	24
0.70	14	26

Cargo mass in tonnes prevented from tipping *per spring lashing*		
H/L	**FORWARD**	**BACKWARD**
0.6	no tip	no tip
0.8	no tip	no tip
1.0	no tip	no tip
1.2	98	98
1.4	57	57
1.6	28	44
1.8	20	37
2.0	16	33
2.2	14	30
2.4	13	28
2.6	12	27
2.8	11	25
3.0	11	25

11.5 WIRE

11.5.1 Top-over lashings

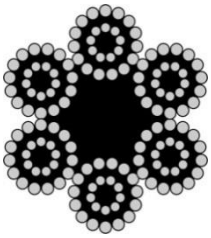

The tables are valid for **steel wire rope (∅ 16 mm/144 wires)** with an MSL of 91 kN or 9,100 daN – (9,100 kg = 9.1 tonnes) and a pre-tension of minimum 10 kN or 1,000 daN – (1,000 kg = 1 tonne).

The values in the tables are proportional to the pre-tension in the lashings.

The masses in the tables are valid for one top-over lashing.

TOP–OVER LASHING

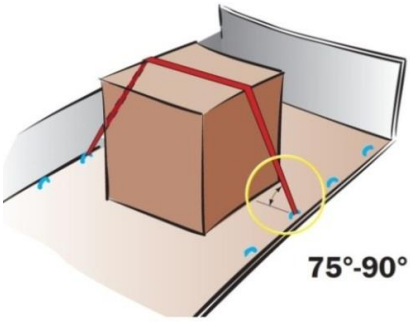

Cargo mass in tonnes prevented from sliding *per top-over lashing*			
μ	**SIDEWAYS**	**FORWARD**	**BACKWARD**
0.00	0.00	0.00	0.00
0.05	0.14	0.12	0.20
0.10	0.30	0.25	0.44
0.15	0.48	0.41	0.76
0.20	0.71	0.59	1.2
0.25	0.98	0.81	1.8
0.30	1.3	1.1	2.5
0.35	1.8	1.4	3.2
0.40	2.4	1.8	3.9
0.45	3.2	2.3	4.8
0.50	4.4	3.0	5.9
0.55	6.5	3.9	7.2
0.60	11	5.3	8.9
0.65	23	7.7	11
0.70	no slide	12	14

Cargo mass in tonnes prevented from tipping *per top-over lashing*								
SIDEWAYS							**FORWARD**	**BACKWARD**
H/B	**1 row**	**2 rows**	**3 rows**	**4 rows**	**5 rows**	**H/L**	**per section**	**per section**
0.6	no tip	no tip	10	4.6	3.3	**0.6**	no tip	no tip
0.8	no tip	19	4.0	2.5	2.0	**0.8**	no tip	no tip
1.0	no tip	5.6	2.4	1.7	1.4	**1.0**	no tip	no tip
1.2	no tip	3.3	1.8	1.3	1.1	**1.2**	30	30
1.4	no tip	2.3	1.4	1.1	0.92	**1.4**	15	15
1.6	15	1.8	1.1	0.90	0.78	**1.6**	6.3	9.8
1.8	6.8	1.5	0.97	0.78	0.68	**1.8**	4.0	7.4
2.0	4.4	1.2	0.84	0.68	0.60	**2.0**	3.0	5.9
2.2	3.3	1.1	0.74	0.61	0.54	**2.2**	2.3	4.9
2.4	2.6	0.95	0.67	0.55	0.49	**2.4**	1.9	4.2
2.6	2.2	0.85	0.60	0.50	0.45	**2.6**	1.6	3.7
2.8	1.8	0.76	0.55	0.46	0.41	**2.8**	1.4	3.3
3.0	1.6	0.70	0.51	0.43	0.38	**3.0**	1.3	3.0

NOTE: WIRES OF THIS SIZE ARE NOT SUITABLE FOR SECURING CARGO WITHIN CONTAINERS AS STRENGTH OF ANCHOR AND LASHING POINTS ARE LIKELY TO BE EXCEEDED.

11.5 WIRE

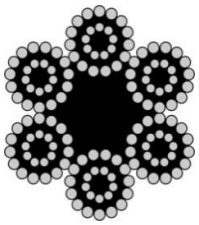

11.5.2 Half-loop lashings

The tables are valid for **steel wire rope (∅ 16 mm/144 wires)** with an MSL of 91 kN or 9,100 daN – (9,100 kg = 9.1 tonnes) and a pre-tension of minimum 10 kN or 1,000 daN – (1,000 kg = 1 tonne).

The masses in the tables below are valid for one pair of half-loop lashings.

The values in the tables are proportional to the maximum securing load (MSL) in the lashings.

HALF-LOOP LASHING

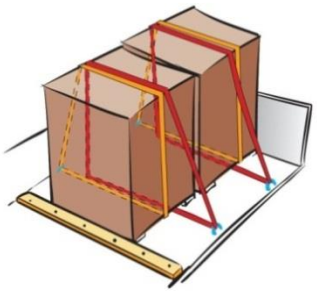

Cargo mass in tonnes prevented from sliding *per pair of half-loop lashing*	
μ	**SIDEWAYS**
0.00	13
0.05	15
0.10	16
0.15	18
0.20	19
0.25	21
0.30	24
0.35	27
0.40	30
0.45	34
0.50	39
0.55	46
0.60	54
0.65	65
0.70	no slide

Cargo mass in tonnes prevented from tipping *per pair of half-loop lashing*					
	SIDEWAYS				
H/B	**1 row**	**2 rows**	**3 rows**	**4 rows**	**5 rows**
0.6	no tip	no tip	54	24	17
0.8	no tip	97	20	13	10
1.0	no tip	29	13	9.0	7.4
1.2	no tip	17	9.2	6.9	5.8
1.4	no tip	12	7.2	5.6	4.8
1.6	77	9.4	5.9	4.7	4.0
1.8	36	7.6	5.0	4.0	3.5
2.0	23	6.4	4.3	3.5	3.1
2.2	17	5.6	3.8	3.1	2.8
2.4	14	4.9	3.4	2.8	2.5
2.6	11	4.4	3.1	2.6	2.3
2.8	9.7	4.0	2.9	2.4	2.1
3.0	8.4	3.6	2.6	2.2	2.0

11.5 WIRE

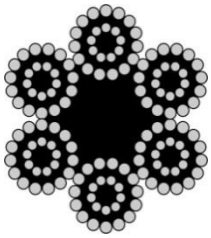

11.5.3 Straight lashings

The tables are valid for **steel wire rope (∅ 16 mm/144 wires)** with an MSL of 91 kN or 9,100 daN – (9,100 kg = 9.1 tonnes) and a pre-tension of minimum 10 kN or 1,000 daN – (1,000 kg = 1 tonne).

All masses are valid for one straight lashing.

The values in the tables are proportional to the maximum securing load (MSL) in the lashings.

STRAIGHT LASHING

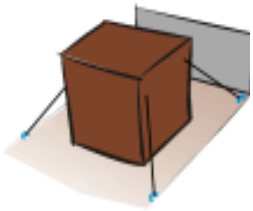

Cargo mass in tonnes prevented from sliding *per straight lashing*			
μ	**SIDEWAYS per side**	**FORWARD**	**BACKWARD**
0.00	3.3	2.9	4.6
0.05	4.0	3.4	5.7
0.10	4.7	4.0	6.9
0.15	5.5	4.7	8.3
0.20	6.4	5.4	10
0.25	7.5	6.2	12
0.30	8.7	7.2	15
0.35	10	8.2	19
0.40	12	9.5	23
0.45	14	11	25
0.50	16	13	28
0.55	20	15	32
0.60	24	17	36
0.65	29	20	41
0.70	no slide	23	45

Cargo mass in tonnes prevented from tipping *per straight lashing*				
H/B	**SIDEWAYS per side**	**H/L**	**FORWARD**	**BACKWARD**
0.6	no tip	**0.6**	no tip	no tip
0.8	no tip	**0.8**	no tip	no tip
1.0	no tip	**1.0**	no tip	no tip
1.2	no tip	**1.2**	85	85
1.4	no tip	**1.4**	46	46
1.6	50	**1.6**	22	33
1.8	25	**1.8**	15	27
2.0	17	**2.0**	12	23
2.2	14	**2.2**	9.8	21
2.4	12	**2.4**	8.6	19
2.6	10	**2.6**	7.7	17
2.8	9.2	**2.8**	7.1	16
3.0	8.4	**3.0**	6.6	15

11.5 WIRE

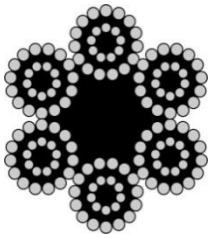

11.5.4 Spring lashings

The tables are valid for **steel wire rope (∅ 16 mm/144 wires)** with an MSL of 91 kN or 9,100 daN – (9,100 kg = 9.1 tonnes) and a pre-tension of minimum 10 kN or 1,000 daN – (1,000 kg = 1 tonne).

The masses in the tables are valid for one spring lashing.

The values in the tables are proportional to the maximum securing load (MSL) in the lashings.

SPRING LASHING



Cargo mass in tonnes prevented from sliding *per spring lashing*		
μ	**FORWARD**	**BACKWARD**
0.00	16	26
0.05	18	29
0.10	19	33
0.15	21	38
0.20	23	43
0.25	25	50
0.30	28	58
0.35	31	70
0.40	34	81
0.45	38	88
0.50	42	96
0.55	48	105
0.60	54	115
0.65	62	127
0.70	73	140

Cargo mass in tonnes prevented from tipping *per spring lashing*		
H/L	**FORWARD**	**BACKWARD**
0.6	no tip	no tip
0.8	no tip	no tip
1.0	no tip	no tip
1.2	525	525
1.4	306	306
1.6	150	233
1.8	107	197
2.0	87	175
2.2	76	160
2.4	68	150
2.6	63	142
2.8	59	136
3.0	56	131

11.6 TAG WASHERS AND NAILS

TAG WASHER



Approximate cargo mass in tonnes prevented from sliding by one tag washer for wood on wood in combination with top-over lashing only

μ**	SIDEWAYS						
	Ø 48	Ø 62	Ø 75	Ø 95	30×57	48×65	130×130
BS (ton)	0.5	0.7	0.9	1.2	0.5	0.7	1.5
0.10	0.21	0.29	0.38	0.50	0.21	0.29	0.63
0.20	0.25	0.35	0.45	0.60	0.25	0.35	0.75
0.30	0.31	0.44	0.56	0.75	0.31	0.44	0.94
	FORWARD						
0.10	0.18	0.25	0.32	0.43	0.18	0.25	0.54
0.20	0.21	0.29	0.38	0.50	0.21	0.29	0.63
0.30	0.25	0.35	0.45	0.60	0.25	0.35	0.75
	BACKWARD						
0.10	0.31	0.44	0.56	0.75	0.31	0.44	0.94
0.20	0.42	0.58	0.75	1.00	0.42	0.58	1.3
0.30	0.60	0.83	1.1	1.4	0.60	0.83	1.8

** Between tag washer and platform bed/cargo.

4 in (100 mm) – NAIL
Approximate cargo mass in tonnes prevented from sliding by one nail

μ***	SIDEWAYS per side		FORWARD		BACKWARD	
	blank	galvanised	blank	galvanised	blank	galvanised
BS (ton)	0.22	0.32	0.22	0.32	0.22	0.32
0.00	0.16	0.23	0.14	0.20	0.22	0.32
0.05	0.17	0.25	0.15	0.21	0.24	0.36
0.10	0.18	0.27	0.16	0.23	0.28	0.40
0.15	0.20	0.29	0.17	0.25	0.31	0.46
0.20	0.22	0.32	0.18	0.27	0.37	0.53
0.25	0.24	0.36	0.20	0.29	0.44	0.64
0.30	0.28	0.40	0.22	0.32	0.52	0.76
0.35	0.31	0.46	0.24	0.36	0.56	0.82
0.40	0.37	0.53	0.28	0.40	0.61	0.89
0.45	0.44	0.64	0.31	0.46	0.67	0.97
0.50	0.55	0.80	0.37	0.53	0.73	1.1
0.55	0.73	1.1	0.44	0.64	0.81	1.2
0.60	1.1	1.6	0.55	0.80	0.92	1.3
0.65	2.2	3.2	0.73	1.1	1.0	1.5
0.70	no slide	no slide	1.1	1.6	1.2	1.8

*** Between cargo and platform bed.

12. QUICK LASHING GUIDE C

Cargo securing on CTUs for transports on Road, Combined Rail and in Sea Area C

12.1 General Remarks

12.1.1 Accelerations to be expected expressed in parts of the gravity acceleration (1g = 9.81 m/s^2).

Transport mode/ Sea area	Sideways		Forward		Backward	
	S	V	F	V	B	V
Road	0.5	1.0	0.8	1.0	0.5	1.0
Combined Rail	0.5	1.0	0.5	1.0	0.5	1.0
Sea Area C	0.8	1.0	0.4	0.2	0.4	0.2

V = Vertical acceleration to be used in combination with horizontal accelerations; S Sideways, F Forward and B Backward.

12.1.2 Goods not rigid in form

If the goods are not rigid in form, more lashings than stipulated in this quick lashing guide could be required.

12.1.3 Sideways, forward and backward refers to a fore–and–aft stowed CTU.

12.2 WEBBING

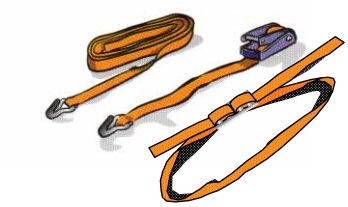

12.2.1 Top-over lashings

The tables are valid for **webbing** with an MSL of 20 kN or 2,000 daN – (2,000 kg = 2 tonnes) and a pre-tension of minimum 4 kN or 400 daN – (400 kg).

The values in the tables are proportional to the lashings' pre-tension.

The masses in the tables are valid for one top-over lashing.

TOP–OVER LASHING

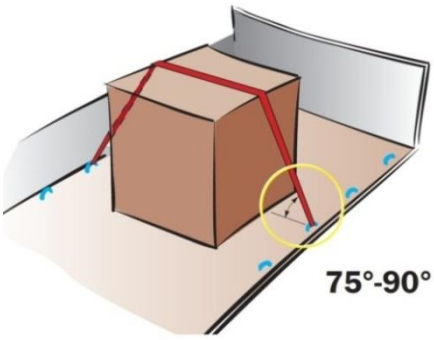

Cargo mass in tonnes prevented from sliding *per top–over lashing*			
μ	**SIDEWAYS**	**FORWARD**	**BACKWARD**
0.00	0.00	0.00	0.00
0.05	0.05	0.05	0.08
0.10	0.10	0.10	0.18
0.15	0.16	0.16	0.29
0.20	0.24	0.24	0.39
0.25	0.32	0.32	0.51
0.30	0.43	0.43	0.63
0.35	0.55	0.55	0.75
0.40	0.71	0.71	0.89
0.45	0.91	0.91	1.0
0.50	1.2	1.2	1.2
0.55	1.6	1.3	1.3
0.60	2.1	1.5	1.5
0.65	3.1	1.7	1.7
0.70	5.0	1.9	1.9

Cargo mass in tonnes prevented from tipping *per top–over lashing*								
SIDEWAYS							**FORWARD**	**BACKWARD**
H/B	**1 row**	**2 rows**	**3 rows**	**4 rows**	**5 rows**	**H/L**	**per section**	**per section**
0.6	no tip	no tip	2.4	1.4	1.0	**0.6**	18	18
0.8	no tip	3.2	1.2	0.81	0.66	**0.8**	5.9	5.9
1.0	no tip	1.5	0.77	0.57	0.48	**1.0**	3.5	3.5
1.2	no tip	0.97	0.57	0.44	0.38	**1.2**	2.5	2.5
1.4	5.9	0.72	0.46	0.36	0.31	**1.4**	2.0	2.0
1.6	2.5	0.57	0.38	0.31	0.27	**1.6**	1.6	1.6
1.8	1.6	0.47	0.32	0.26	0.23	**1.8**	1.4	1.4
2.0	1.2	0.41	0.28	0.23	0.21	**2.0**	1.2	1.2
2.2	0.93	0.35	0.25	0.21	0.18	**2.2**	0.93	1.0
2.4	0.77	0.31	0.23	0.19	0.17	**2.4**	0.77	0.93
2.6	0.66	0.28	0.21	0.17	0.15	**2.6**	0.66	0.84
2.8	0.57	0.26	0.19	0.16	0.14	**2.8**	0.57	0.77
3.0	0.51	0.23	0.17	0.15	0.13	**3.0**	0.51	0.71

12.2 WEBBING

12.2.2 Half-loop lashings

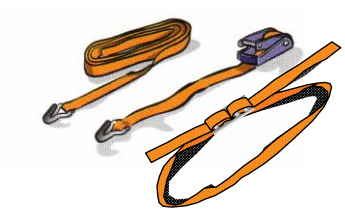

The tables are valid for **webbing** with an MSL of 20 kN or 2,000 daN – (2,000 kg = 2 tonnes) and a pre-tension of minimum 4 kN or 400 daN – (400 kg).

The masses in the tables below are valid for one pair of half-loop lashings.

The values in the tables are proportional to the maximum securing load (MSL) in the lashings.

HALF-LOOP LASHING

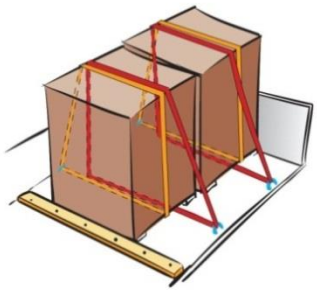

Cargo mass in tonnes prevented from sliding *per pair of half-loop lashing*	
μ	**SIDEWAYS**
0.00	2.5
0.05	2.8
0.10	3.0
0.15	3.3
0.20	3.6
0.25	4.0
0.30	4.3
0.35	4.8
0.40	5.3
0.45	5.9
0.50	6.6
0.55	7.4
0.60	8.4
0.65	9.7
0.70	11

Cargo mass in tonnes prevented from tipping *per pair of half-loop lashing*					
SIDEWAYS					
H/B	**1 row**	**2 rows**	**3 rows**	**4 rows**	**5 rows**
0.6	no tip	no tip	7.0	3.9	2.9
0.8	no tip	9.1	3.3	2.3	1.9
1.0	no tip	4.2	2.2	1.6	1.4
1.2	no tip	2.8	1.6	1.3	1.1
1.4	17	2.1	1.3	1.0	0.89
1.6	7.3	1.6	1.1	0.87	0.76
1.8	4.6	1.4	0.92	0.75	0.66
2.0	3.4	1.2	0.80	0.66	0.58
2.2	2.7	1.0	0.71	0.59	0.52
2.4	2.2	0.90	0.64	0.53	0.47
2.6	1.9	0.81	0.58	0.49	0.43
2.8	1.6	0.73	0.53	0.45	0.40
3.0	1.5	0.67	0.49	0.41	0.37

12.2 WEBBING

12.2.3 Straight lashings

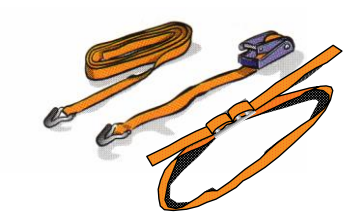

The tables are valid for **webbing** with an MSL of 20 kN or 2,000 daN – (2,000 kg = 2 tonnes) and a pre-tension of minimum 4 kN or 400 daN – (400 kg).

All masses are valid for one straight lashing.

The values in the tables are proportional to the maximum securing load (MSL) in the lashings.

STRAIGHT LASHING

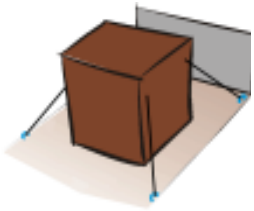

Cargo mass in tonnes prevented from sliding *per straight lashing*			
μ	**SIDEWAYS per side**	**FORWARD**	**BACKWARD**
0.00	0.64	0.64	1.0
0.05	0.76	0.76	1.2
0.10	0.89	0.89	1.5
0.15	1.0	1.0	1.8
0.20	1.2	1.2	2.1
0.25	1.4	1.4	2.3
0.30	1.6	1.6	2.6
0.35	1.8	1.8	2.8
0.40	2.1	2.1	3.1
0.45	2.4	2.4	3.3
0.50	2.8	2.8	3.6
0.55	3.2	3.2	3.9
0.60	3.7	3.7	4.2
0.65	4.4	4.4	4.5
0.70	5.2	4.8	4.8

Cargo mass in tonnes prevented from tipping *per straight lashing*				
H/B	**SIDEWAYS per side**	**H/L**	**FORWARD**	**BACKWARD**
0.6	no tip	**0.6**	20	20
0.8	no tip	**0.8**	7.6	7.6
1.0	no tip	**1.0**	5.1	5.1
1.2	no tip	**1.2**	4.0	4.0
1.4	10	**1.4**	3.4	3.4
1.6	4.7	**1.6**	3.0	3.0
1.8	3.2	**1.8**	2.7	2.7
2.0	2.5	**2.0**	2.5	2.5
2.2	2.1	**2.2**	2.1	2.4
2.4	1.9	**2.4**	1.9	2.3
2.6	1.7	**2.6**	1.7	2.2
2.8	1.6	**2.8**	1.6	2.1
3.0	1.5	**3.0**	1.5	2.0

12.2 WEBBING

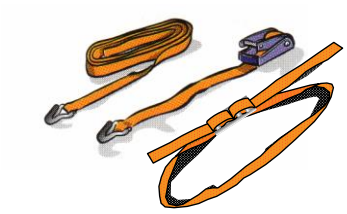

12.2.4 Spring lashings

The tables are valid for **webbing** with an MSL of 20 kN or 2,000 daN – (2,000 kg = 2 tonnes) and a pre-tension of minimum 4 kN or 400 daN – (400 kg).

The masses in the tables are valid for one spring lashing.

The values in the tables are proportional to the maximum securing load (MSL) in the lashings.

SPRING LASHING



Cargo mass in tonnes prevented from sliding *per spring lashing*		
μ	**FORWARD**	**BACKWARD**
0.00	3.6	5.8
0.05	3.9	6.5
0.10	4.3	7.3
0.15	4.7	8.3
0.20	5.1	9.0
0.25	5.6	9.4
0.30	6.1	9.9
0.35	6.8	10
0.40	7.5	11
0.45	8.3	12
0.50	9.3	12
0.55	11	13
0.60	12	13
0.65	14	14
0.70	15	15

Cargo mass in tonnes prevented from tipping *per spring lashing*		
H/L	**FORWARD**	**BACKWARD**
0.6	86	86
0.8	38	38
1.0	29	29
1.2	25	25
1.4	22	22
1.6	21	21
1.8	20	20
2.0	19	19
2.2	17	19
2.4	15	18
2.6	14	18
2.8	13	18
3.0	12	17

12.3 CHAIN

12.3.1 Top-over lashings



The tables are valid for **chain (∅ 9 mm, class 8)** with an MSL of 50 kN or 5,000 daN – (5,000 kg = 5 tonnes) and a pre-tension of minimum 10 kN or 1,000 daN – (1,000 kg = 1 tonne).

The values in the tables are proportional to the pre-tension in the lashings.

The masses in the tables are valid for one top–over lashing.

TOP-OVER LASHING

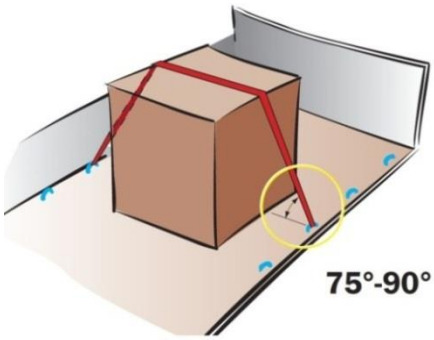

Cargo mass in tonnes prevented from sliding *per top-over lashing*			
μ	**SIDEWAYS**	**FORWARD**	**BACKWARD**
0.00	0.00	0.00	0.00
0.05	0.12	0.12	0.20
0.10	0.25	0.25	0.44
0.15	0.41	0.41	0.72
0.20	0.59	0.59	0.98
0.25	0.81	0.81	1.3
0.30	1.1	1.1	1.6
0.35	1.4	1.4	1.9
0.40	1.8	1.8	2.2
0.45	2.3	2.3	2.6
0.50	3.0	3.0	3.0
0.55	3.9	3.4	3.4
0.60	5.3	3.8	3.8
0.65	7.7	4.3	4.3
0.70	12	4.8	4.8

Cargo mass in tonnes prevented from tipping *per top-over lashing*								
SIDEWAYS							**FORWARD**	**BACKWARD**
H/B	**1 row**	**2 rows**	**3 rows**	**4 rows**	**5 rows**	**H/L**	**per section**	**per section**
0.6	no tip	no tip	6.1	3.4	2.6	**0.6**	44	44
0.8	no tip	8.0	2.9	2.0	1.6	**0.8**	15	15
1.0	no tip	3.7	1.9	1.4	1.2	**1.0**	8.9	8.9
1.2	no tip	2.4	1.4	1.1	0.95	**1.2**	6.3	6.3
1.4	15	1.8	1.1	0.90	0.78	**1.4**	4.9	4.9
1.6	6.3	1.4	0.95	0.76	0.67	**1.6**	4.0	4.0
1.8	4.0	1.2	0.81	0.66	0.58	**1.8**	3.4	3.4
2.0	3.0	1.0	0.71	0.58	0.52	**2.0**	3.0	3.0
2.2	2.3	0.89	0.63	0.52	0.46	**2.2**	2.3	2.6
2.4	1.9	0.79	0.57	0.47	0.42	**2.4**	1.9	2.3
2.6	1.6	0.71	0.51	0.43	0.38	**2.6**	1.6	2.1
2.8	1.4	0.64	0.47	0.40	0.35	**2.8**	1.4	1.9
3.0	1.3	0.59	0.43	0.37	0.33	**3.0**	1.3	1.8

12.3 CHAIN



12.3.2 Half-loop lashings

The tables are valid for **chain (∅ 9 mm, class 8)** with an MSL of 50 kN or 5,000 daN – (5,000 kg = 5 tonnes) and a pre-tension of minimum 10 kN or 1,000 daN – (1,000 kg = 1 tonne).

The masses in the tables below are valid for one pair of half-loop lashings.

The values in the tables are proportional to the maximum securing load (MSL) in the lashings.

HALF-LOOP LASHING

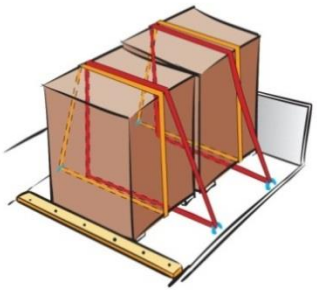

Cargo mass in tonnes prevented from sliding *per pair of half-loop lashing*	
μ	**SIDEWAYS**
0.00	6.4
0.05	6.9
0.10	7.6
0.15	8.2
0.20	9.0
0.25	9.9
0.30	11
0.35	12
0.40	13
0.45	15
0.50	16
0.55	19
0.60	21
0.65	24
0.70	28

Cargo mass in tonnes prevented from tipping *per pair of half-loop lashing*					
SIDEWAYS					
H/B	**1 row**	**2 rows**	**3 rows**	**4 rows**	**5 rows**
0.6	no tip	no tip	17	9.7	7.3
0.8	no tip	23	8.3	5.7	4.6
1.0	no tip	11	5.5	4.1	3.4
1.2	no tip	6.9	4.1	3.1	2.7
1.4	42	5.1	3.2	2.6	2.2
1.6	18	4.1	2.7	2.2	1.9
1.8	12	3.4	2.3	1.9	1.6
2.0	8.5	2.9	2.0	1.7	1.5
2.2	6.7	2.5	1.8	1.5	1.3
2.4	5.5	2.2	1.6	1.3	1.2
2.6	4.7	2.0	1.5	1.2	1.1
2.8	4.1	1.8	1.3	1.1	1.00
3.0	3.6	1.7	1.2	1.0	0.93

12.3 CHAIN

12.3.3 Straight lashings



The tables are valid for **chain (∅ 9 mm, class 8)** with an MSL of 50 kN or 5,000 daN – (5,000 kg = 5 tonnes) and a pre-tension of minimum 10 kN or 1,000 daN – (1,000 kg = 1 tonne).

All masses are valid for one straight lashing.

The values in the tables are proportional to the maximum securing load (MSL) in the lashings.

STRAIGHT LASHING

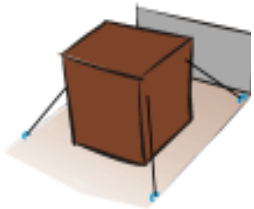

Cargo mass in tonnes prevented from sliding *per straight lashing*			
μ	**SIDEWAYS per side**	**FORWARD**	**BACKWARD**
0.00	1.6	1.6	2.5
0.05	1.9	1.9	3.1
0.10	2.2	2.2	3.8
0.15	2.6	2.6	4.6
0.20	3.0	3.0	5.2
0.25	3.4	3.4	5.8
0.30	3.9	3.9	6.4
0.35	4.5	4.5	7.0
0.40	5.2	5.2	7.6
0.45	6.0	6.0	8.3
0.50	6.9	6.9	9.0
0.55	8.0	8.0	9.7
0.60	9.3	9.3	11
0.65	11	11	11
0.70	13	12	12

Cargo mass in tonnes prevented from tipping *per straight lashing*				
H/B	**SIDEWAYS per side**	**H/L**	**FORWARD**	**BACKWARD**
0.6	no tip	**0.6**	51	51
0.8	no tip	**0.8**	19	19
1.0	no tip	**1.0**	13	13
1.2	no tip	**1.2**	10	10
1.4	25	**1.4**	8.5	8.5
1.6	12	**1.6**	7.5	7.5
1.8	8.1	**1.8**	6.9	6.9
2.0	6.4	**2.0**	6.4	6.4
2.2	5.4	**2.2**	5.4	6.0
2.4	4.7	**2.4**	4.7	5.7
2.6	4.2	**2.6**	4.2	5.5
2.8	3.9	**2.8**	3.9	5.3
3.0	3.6	**3.0**	3.6	5.1

12.3 CHAIN



12.3.4 Spring lashings

The tables are valid for **chain (∅ 9 mm, class 8)** with an MSL of 50 kN or 5,000 daN – (5,000 kg = 5 tonnes) and a pre-tension of minimum 10 kN or 1,000 daN – (1,000 kg = 1 tonne).
The masses in the tables are valid for one spring lashing.

The values in the tables are proportional to the maximum securing load (MSL) in the lashings.

SPRING LASHING



Cargo mass in tonnes prevented from sliding *per spring lashing*		
μ	**FORWARD**	**BACKWARD**
0.00	9.0	14
0.05	9.8	16
0.10	11	18
0.15	12	21
0.20	13	22
0.25	14	24
0.30	15	25
0.35	17	26
0.40	19	28
0.45	21	29
0.50	23	30
0.55	26	32
0.60	30	34
0.65	34	35
0.70	37	37

Cargo mass in tonnes prevented from tipping *per spring lashing*		
H/L	**FORWARD**	**BACKWARD**
0.6	216	216
0.8	96	96
1.0	72	72
1.2	62	62
1.4	56	56
1.6	52	52
1.8	50	50
2.0	48	48
2.2	42	47
2.4	38	46
2.6	35	45
2.8	33	44
3.0	31	43

12.4 STEEL STRAPPING

12.4.1 Top-over lashings

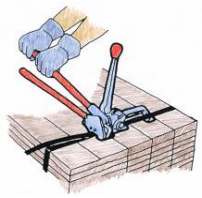

The tables are valid for **steel strapping** (**32 × 0.8 mm)** with an MSL of 17 kN or 1,700 daN – (1,700 kg = 1.7 tonnes) and a pre-tension of minimum 2.4 kN or 240 daN – (240 kg).

The values in the tables are proportional to the pre-tension in the lashings.

The masses in the tables are valid for one top-over lashing.

TOP-OVER LASHING

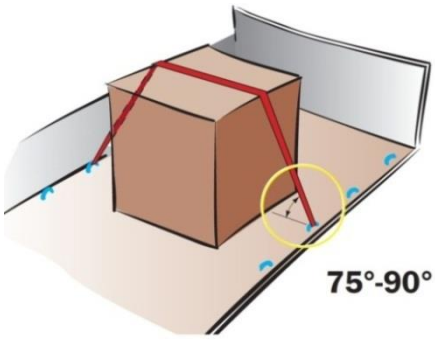

Cargo mass in tonnes prevented from sliding *per top-over lashing*			
μ	**SIDEWAYS**	**FORWARD**	**BACKWARD**
0.00	0.00	0.00	0.00
0.05	0.03	0.03	0.05
0.10	0.06	0.06	0.11
0.15	0.10	0.10	0.17
0.20	0.14	0.14	0.24
0.25	0.19	0.19	0.30
0.30	0.26	0.26	0.38
0.35	0.33	0.33	0.45
0.40	0.43	0.43	0.53
0.45	0.55	0.55	0.62
0.50	0.71	0.71	0.71
0.55	0.94	0.81	0.81
0.60	1.3	0.91	0.91
0.65	1.8	1.0	1.0
0.70	3.0	1.1	1.1

Cargo mass in tonnes prevented from tipping *per top-over lashing*								
SIDEWAYS							**FORWARD**	**BACKWARD**
H/B	**1 row**	**2 rows**	**3 rows**	**4 rows**	**5 rows**	**H/L**	**per section**	**per section**
0.6	no tip	no tip	1.5	0.82	0.62	**0.6**	11	11
0.8	no tip	1.9	0.70	0.48	0.39	**0.8**	3.5	3.5
1.0	no tip	0.89	0.46	0.34	0.29	**1.0**	2.1	2.1
1.2	no tip	0.58	0.34	0.27	0.23	**1.2**	1.5	1.5
1.4	3.5	0.43	0.27	0.22	0.19	**1.4**	1.2	1.2
1.6	1.5	0.34	0.23	0.18	0.16	**1.6**	0.97	0.97
1.8	0.97	0.28	0.19	0.16	0.14	**1.8**	0.82	0.82
2.0	0.71	0.24	0.17	0.14	0.12	**2.0**	0.71	0.71
2.2	0.56	0.21	0.15	0.13	0.11	**2.2**	0.56	0.63
2.4	0.46	0.19	0.14	0.11	0.10	**2.4**	0.46	0.56
2.6	0.39	0.17	0.12	0.10	0.09	**2.6**	0.39	0.51
2.8	0.34	0.15	0.11	0.09	0.08	**2.8**	0.34	0.46
3.0	0.30	0.14	0.10	0.09	0.08	**3.0**	0.30	0.43

12.4 STEEL STRAPPING

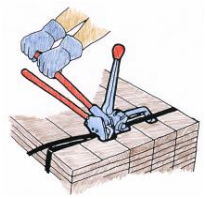

12.4.2 Half-loop lashings

The tables are valid for steel strapping (32 × 0.8 mm) with an MSL of 17 kN or 1,700 daN – (1,700 kg = 1.7 tonnes) and a pre-tension of minimum 2.4 kN or 240 daN – (240 kg). The masses in the tables below are valid for one pair of half-loop lashings.

The values in the tables are proportional to the maximum securing load (MSL) in the lashings.

HALF-LOOP LASHING

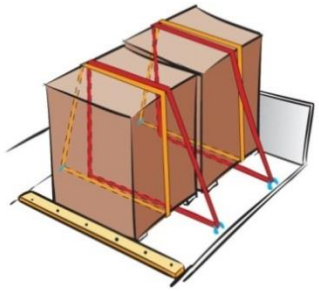

Cargo mass in tonnes prevented from sliding *per pair of half-loop lashing*	
μ	**SIDEWAYS**
0.00	2.2
0.05	2.4
0.10	2.6
0.15	2.8
0.20	3.1
0.25	3.4
0.30	3.7
0.35	4.1
0.40	4.5
0.45	5.0
0.50	5.6
0.55	6.3
0.60	7.2
0.65	8.2
0.70	9.6

Cargo mass in tonnes prevented from tipping *per pair of half-loop lashing*					
SIDEWAYS					
H/B	**1 row**	**2 rows**	**3 rows**	**4 rows**	**5 rows**
0.6	no tip	no tip	5.9	3.3	2.5
0.8	no tip	7.7	2.8	1.9	1.6
1.0	no tip	3.6	1.9	1.4	1.2
1.2	no tip	2.4	1.4	1.1	0.91
1.4	14	1.7	1.1	0.87	0.75
1.6	6.2	1.4	0.92	0.74	0.64
1.8	3.9	1.2	0.78	0.64	0.56
2.0	2.9	0.98	0.68	0.56	0.50
2.2	2.3	0.86	0.61	0.50	0.44
2.4	1.9	0.76	0.55	0.45	0.40
2.6	1.6	0.69	0.50	0.41	0.37
2.8	1.4	0.62	0.45	0.38	0.34
3.0	1.2	0.57	0.42	0.35	0.32

12.4 STEEL STRAPPING

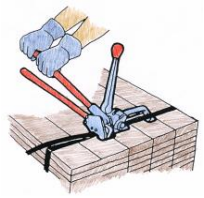

12.4.3 Straight lashings

The tables are valid for **steel strapping** (**32 × 0.8 mm)** with an MSL of 17 kN or 1,700 daN – (1,700 kg = 1.7 tonnes) and a pre-tension of minimum 2.4 kN or 240 daN – (240 kg).

All masses are valid for one straight lashing.

The values in the tables are proportional to the maximum securing load (MSL) in the lashings.

STRAIGHT LASHING

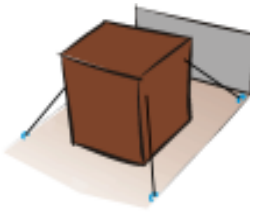

Cargo mass in tonnes prevented from sliding *per straight lashing*			
μ	**SIDEWAYS per side**	**FORWARD**	**BACKWARD**
0.00	0.54	0.54	0.87
0.05	0.64	0.64	1.1
0.10	0.75	0.75	1.3
0.15	0.88	0.88	1.6
0.20	1.0	1.0	1.8
0.25	1.2	1.2	2.0
0.30	1.3	1.3	2.2
0.35	1.5	1.5	2.4
0.40	1.8	1.8	2.6
0.45	2.0	2.0	2.8
0.50	2.3	2.3	3.1
0.55	2.7	2.7	3.3
0.60	3.2	3.2	3.6
0.65	3.7	3.7	3.9
0.70	4.4	4.1	4.1

Cargo mass in tonnes prevented from tipping *per straight lashing*				
H/B	**SIDEWAYS per side**	**H/L**	**FORWARD**	**BACKWARD**
0.6	no tip	**0.6**	17	17
0.8	no tip	**0.8**	6.5	6.5
1.0	no tip	**1.0**	4.3	4.3
1.2	no tip	**1.2**	3.4	3.4
1.4	8.7	**1.4**	2.9	2.9
1.6	4.0	**1.6**	2.6	2.6
1.8	2.8	**1.8**	2.3	2.3
2.0	2.2	**2.0**	2.2	2.2
2.2	1.8	**2.2**	1.8	2.0
2.4	1.6	**2.4**	1.6	1.9
2.6	1.4	**2.6**	1.4	1.9
2.8	1.3	**2.8**	1.3	1.8
3.0	1.2	**3.0**	1.2	1.7

12.4 STEEL STRAPPING

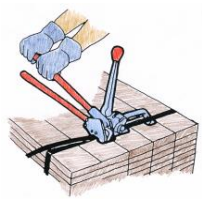

12.4.4 Spring lashings

The tables are valid for **steel strapping** (**32 × 0.8 mm)** with an MSL of 17 kN or 1,700 daN – (1,700 kg = 1.7 tonnes) and a pre-tension of minimum 2.4 kN or 240 daN – (240 kg). The masses in the tables are valid for one spring lashing.

The values in the tables are proportional to the maximum securing load (MSL) in the lashings.

SPRING LASHING



Cargo mass in tonnes prevented from sliding *per spring lashing*		
μ	**FORWARD**	**BACKWARD**
0.00	3.1	4.9
0.05	3.3	5.5
0.10	3.6	6.2
0.15	4.0	7.0
0.20	4.3	7.6
0.25	4.8	8.0
0.30	5.2	8.5
0.35	5.8	8.9
0.40	6.4	9.4
0.45	7.1	9.9
0.50	7.9	10
0.55	8.9	11
0.60	10	11
0.65	12	12
0.70	13	13

Cargo mass in tonnes prevented from tipping *per spring lashing*		
H/L	**FORWARD**	**BACKWARD**
0.6	74	74
0.8	33	33
1.0	25	25
1.2	21	21
1.4	19	19
1.6	18	18
1.8	17	17
2.0	16	16
2.2	14	16
2.4	13	15
2.6	12	15
2.8	11	15
3.0	11	15

12.5 WIRE

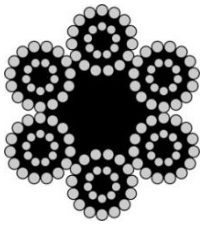

12.5.1 Top-over lashings

The tables are valid for **steel wire rope (∅ 16 mm/144 wires)** with an MSL of 91 kN or 9,100 daN – (9,100 kg = 9.1 tonnes) and a pre-tension of minimum 10 kN or 1,000 daN – (1,000 kg = 1 tonne).

The values in the tables are proportional to the pre-tension in the lashings.

The masses in the tables are valid for one top-over lashing.

TOP-OVER LASHING

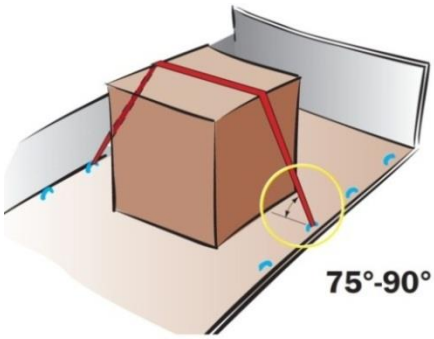

Cargo mass in tonnes prevented from sliding *per top-over lashing*			
μ	**SIDEWAYS**	**FORWARD**	**BACKWARD**
0.00	0.00	0.00	0.00
0.05	0.12	0.12	0.20
0.10	0.25	0.25	0.44
0.15	0.41	0.41	0.72
0.20	0.59	0.59	0.98
0.25	0.81	0.81	1.3
0.30	1.1	1.1	1.6
0.35	1.4	1.4	1.9
0.40	1.8	1.8	2.2
0.45	2.3	2.3	2.6
0.50	3.0	3.0	3.0
0.55	3.9	3.4	3.4
0.60	5.3	3.8	3.8
0.65	7.7	4.3	4.3
0.70	12	4.8	4.8

Cargo mass in tonnes prevented from tipping *per top-over lashing*								
SIDEWAYS							**FORWARD**	**BACKWARD**
H/B	**1 row**	**2 rows**	**3 rows**	**4 rows**	**5 rows**	**H/L**	**per section**	**per section**
0.6	no tip	no tip	6.1	3.4	2.6	**0.6**	44	44
0.8	no tip	8.0	2.9	2.0	1.6	**0.8**	15	15
1.0	no tip	3.7	1.9	1.4	1.2	**1.0**	8.9	8.9
1.2	no tip	2.4	1.4	1.1	0.95	**1.2**	6.3	6.3
1.4	15	1.8	1.1	0.90	0.78	**1.4**	4.9	4.9
1.6	6.3	1.4	0.95	0.76	0.67	**1.6**	4.0	4.0
1.8	4.0	1.2	0.81	0.66	0.58	**1.8**	3.4	3.4
2.0	3.0	1.0	0.71	0.58	0.52	**2.0**	3.0	3.0
2.2	2.3	0.89	0.63	0.52	0.46	**2.2**	2.3	2.6
2.4	1.9	0.79	0.57	0.47	0.42	**2.4**	1.9	2.3
2.6	1.6	0.71	0.51	0.43	0.38	**2.6**	1.6	2.1
2.8	1.4	0.64	0.47	0.40	0.35	**2.8**	1.4	1.9
3.0	1.3	0.59	0.43	0.37	0.33	**3.0**	1.3	1.8

12.5 WIRE

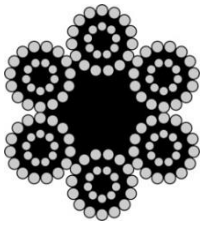

12.5.2 Half-loop lashings

The tables are valid for **steel wire rope (∅ 16 mm/144 wires)** with an MSL of 91 kN or 9,100 daN – (9,100 kg = 9.1 tonnes) and a pre-tension of minimum 10 kN or 1,000 daN – (1,000 kg = 1 tonne). The masses in the tables below are valid for one pair of half-loop lashings.

The values in the tables are proportional to the maximum securing load (MSL) in the lashings.

HALF-LOOP LASHING

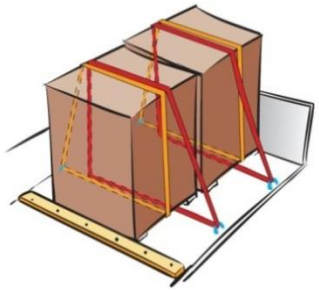

Cargo mass in tonnes prevented from sliding *per pair of half-loop lashing*	
μ	**SIDEWAYS**
0.00	12
0.05	13
0.10	14
0.15	15
0.20	16
0.25	18
0.30	20
0.35	22
0.40	24
0.45	27
0.50	30
0.55	34
0.60	38
0.65	44
0.70	51

Cargo mass in tonnes prevented from tipping *per pair of half-loop lashing*					
	SIDEWAYS				
H/B	**1 row**	**2 rows**	**3 rows**	**4 rows**	**5 rows**
0.6	no tip	no tip	32	18	13
0.8	no tip	41	15	10	8.4
1.0	no tip	19	9.9	7.4	6.2
1.2	no tip	13	7.4	5.7	4.9
1.4	77	9.4	5.9	4.7	4.0
1.6	33	7.4	4.9	3.9	3.4
1.8	21	6.2	4.2	3.4	3.0
2.0	15	5.3	3.7	3.0	2.7
2.2	12	4.6	3.3	2.7	2.4
2.4	10	4.1	2.9	2.4	2.2
2.6	8.6	3.7	2.7	2.2	2.0
2.8	7.5	3.3	2.4	2.0	1.8
3.0	6.6	3.1	2.2	1.9	1.7

12.5 WIRE

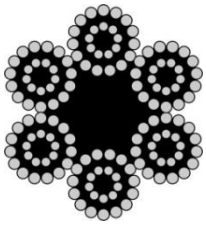

12.5.3 Straight lashings

The tables are valid for **steel wire rope (∅ 16 mm/144 wires)** with an MSL of 91 kN or 9,100 daN – (9,100 kg = 9.1 tonnes) and a pre-tension of minimum 10 kN or 1,000 daN – (1,000 kg = 1 tonne).

All masses are valid for one straight lashing.

The values in the tables are proportional to the maximum securing load (MSL) in the lashings.

STRAIGHT LASHING

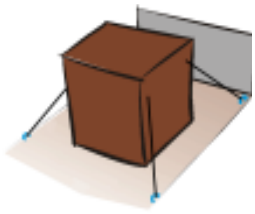

Cargo mass in tonnes prevented from sliding *per straight lashing*			
μ	**SIDEWAYS per side**	**FORWARD**	**BACKWARD**
0.00	2.9	2.9	4.6
0.05	3.4	3.4	5.7
0.10	4.0	4.0	6.9
0.15	4.7	4.7	8.3
0.20	5.4	5.4	9.5
0.25	6.2	6.2	11
0.30	7.2	7.2	12
0.35	8.2	8.2	13
0.40	9.5	9.5	14
0.45	11	11	15
0.50	13	13	16
0.55	15	15	18
0.60	17	17	19
0.65	20	20	21
0.70	23	22	22

Cargo mass in tonnes prevented from tipping *per straight lashing*				
H/B	**SIDEWAYS per side**	**H/L**	**FORWARD**	**BACKWARD**
0.6	no tip	**0.6**	93	93
0.8	no tip	**0.8**	35	35
1.0	no tip	**1.0**	23	23
1.2	no tip	**1.2**	18	18
1.4	46	**1.4**	15	15
1.6	22	**1.6**	14	14
1.8	15	**1.8**	12	12
2.0	12	**2.0**	12	12
2.2	9.8	**2.2**	9.8	11
2.4	8.6	**2.4**	8.6	10
2.6	7.7	**2.6**	7.7	9.9
2.8	7.1	**2.8**	7.1	9.6
3.0	6.6	**3.0**	6.6	9.3

12.5 WIRE

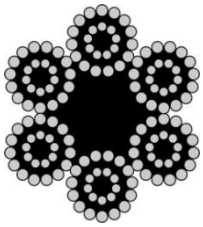

12.5.4 Spring lashings

The tables are valid for **steel wire rope (∅ 16 mm/144 wires)** with an MSL of 91 kN or 9,100 daN – (9,100 kg = 9.1 tonnes) and a pre-tension of minimum 10 kN or 1,000 daN – (1,000 kg = 1 tonne).

The masses in the tables are valid for one spring lashing.

The values in the tables are proportional to the maximum securing load (MSL) in the lashings.

SPRING LASHING



Cargo mass in tonnes prevented from sliding *per spring lashing*		
μ	**FORWARD**	**BACKWARD**
0.00	16	26
0.05	18	29
0.10	19	33
0.15	21	38
0.20	23	41
0.25	25	43
0.30	28	45
0.35	31	48
0.40	34	50
0.45	38	53
0.50	42	56
0.55	48	58
0.60	54	61
0.65	62	65
0.70	68	68

Cargo mass in tonnes prevented from tipping *per spring lashing*		
H/L	**FORWARD**	**BACKWARD**
0.6	394	394
0.8	175	175
1.0	131	131
1.2	112	112
1.4	102	102
1.6	95	95
1.8	91	91
2.0	87	87
2.2	76	85
2.4	68	83
2.6	63	81
2.8	59	80
3.0	56	79

12.6 TAG WASHERS AND NAILS

TAG WASHER



Approximate cargo mass in tonnes prevented from sliding by one tag washer for wood on wood in combination with top-over lashing only

μ**	SIDEWAYS						
	∅ 48	∅ 62	∅ 75	∅ 95	30×57	48×65	130×130
BS (ton)	**0.5**	**0.7**	**0.9**	**1.2**	**0.5**	**0.7**	**1.5**
0.10	0.18	0.25	0.32	0.43	0.18	0.25	0.54
0.20	0.21	0.29	0.38	0.50	0.21	0.29	0.63
0.30	0.25	0.35	0.45	0.60	0.25	0.35	0.75
	FORWARD						
0.10	0.18	0.25	0.32	0.43	0.18	0.25	0.54
0.20	0.21	0.29	0.38	0.50	0.21	0.29	0.63
0.30	0.25	0.35	0.45	0.60	0.25	0.35	0.75
	BACKWARD						
0.10	0.31	0.44	0.56	0.75	0.31	0.44	0.94
0.20	0.35	0.49	0.63	0.83	0.35	0.49	1.0
0.30	0.37	0.51	0.66	0.88	0.37	0.51	1.1

** Between tag washer and platform bed/cargo.

4 in (100 mm) – NAIL
Approximate cargo mass in tonnes prevented from sliding by one nail

μ***	SIDEWAYS per side		FORWARD		BACKWARD	
	blank	galvanised	blank	galvanised	blank	galvanised
BS (ton)	**0.22**	**0.32**	**0.22**	**0.32**	**0.22**	**0.32**
0.00	0.14	0.20	0.14	0.20	0.22	0.32
0.05	0.15	0.21	0.15	0.21	0.24	0.36
0.10	0.16	0.23	0.16	0.23	0.28	0.40
0.15	0.17	0.25	0.17	0.25	0.30	0.43
0.20	0.18	0.27	0.18	0.27	0.31	0.44
0.25	0.20	0.29	0.20	0.29	0.31	0.46
0.30	0.22	0.32	0.22	0.32	0.32	0.47
0.35	0.24	0.36	0.24	0.36	0.33	0.48
0.40	0.28	0.40	0.28	0.40	0.34	0.50
0.45	0.31	0.46	0.31	0.46	0.35	0.52
0.50	0.37	0.53	0.37	0.53	0.37	0.53
0.55	0.44	0.64	0.38	0.55	0.38	0.55
0.60	0.55	0.80	0.39	0.57	0.39	0.57
0.65	0.73	1.1	0.41	0.59	0.41	0.59
0.70	1.1	1.6	0.42	0.62	0.42	0.62

*** Between cargo and platform bed.

MariTerm AB

P.O. Box 74
SE-263 21 Höganäs

Phone +46 42 33 31 00

E-mail: info@mariterm.se
Website: www.mariterm.se