Inspections of Cargo Securing in Loading Units



Investigation to establish design accelerations for static design of cargo securing arrangements for intermodal rail transports

MariTerm AB

2014-10-10

Phone. +46 (0)42 33 31 00
Fax. +46 (0)42 33 31 02

P.O. Box 74
SE-263 21 Höganäs
SWEDEN

www.mariterm.se
info@mariterm.se

Innehåll

Introduction **3**
Inspection procedure 3
Attendance 4
Inspected units 5
Summary of results **6**
Limiting accelerations 6
Blocking 8
Other observations 9
Conclusions **10**
Appendix – Documentation of inspected units **11**

Introduction

The basic design accelerations for road and intermodal rail transports are currently not the same, which is an unfavourable situation for intermodal traffic. The question has therefore been raised whether cargo securing arrangements designed according to the road principles also can withstand the accelerations that may occur during an intermodal rail transport.

The following horizontal static acceleration values, expressed in parts of the gravity acceleration g = 9.81 m/s^2, is valid for the design of securing arrangements for road transport:

- Forward in the driving direction of the vehicle: 0.8 g
- Backwards: 0.5 g
- Sideways: 0.5 g

For design purposes these acceleration values are combined with the gravity acceleration 1 g acting downward. It is assumed that the horizontal accelerations do not act simultaneously in the different directions.

To establish if these accelerations are sufficient also for the design of securing arrangements for combined rail transports, it was decided by UIC, UIRR and MariTerm AB on a meeting at UIC in Paris 2014-02-27 that, apart from dynamic test transports between selected terminals in Europe, inspections of randomly selected loading units should be carried out jointly as part of the European project Destiny.

Inspection procedure

In connection to the dynamic test transports, inspections of the cargo securing in loading units were carried out at seven different terminals in Europe. In total, 131 loading units were inspected. At the inspections, all relevant properties of the loading unit, the cargo and the cargo securing measures were documented. Due to customer concerns, photos taken during the inspections will not be made publicly available. Instead, sketches have been made of each unit, see appendix.

The actual pre-tension in web lashings were sampled by the use of a DELOG tension meter.



The most probable friction factors between the cargo and the floor and in-between cargo layers have been estimated based on the condition of the surfaces, the table of friction factors in the European Standard EN 12195-1 and numerous tests performed by MariTerm AB.

For the cargo in each unit, the actual limiting accelerations of the securing arrangement have then been calculated in each direction; forward, backward and sideways.

Attendance

The inspections have been made possible by the kind and much appreciated contribution and participation by UIRR, UIC, Hupac, Kombiverkehr and all the terminals where the inspections were carried out.

The following persons have been attending the inspections of loading units:

Verona, Interterminal Quadrante Servizi 2014-05-22/23

Marco Battilana	Hupac
Sven Sökjer-Petersen	MariTerm AB

Antwerpen, IFB terminal, 2014-05-27

Eric Feyen	UIRR
Lieven Vanderheyden	IFB
Frédéric Buyse	IFB
Jos Bormans	B-Cargo
Sven Sökjer-Petersen	MariTerm AB

Genk, Euro Terminal, 2014-05-27

Eric Feyen	UIRR
Frédéric Buyse	IFB
Sven Sökjer-Petersen	MariTerm AB

Novara, Novara CIM, 2014-05-29

Marco Battilana	Hupac
Onorato Zanini	Hupac
Francesco Garrisi	Trenitalia
Quirico Pizzutoli	Trenitalia
Juraj Jagelcak	University of Žilina
Sven Sökjer-Petersen	MariTerm AB

Busto, Busto Arsizio-Gallarate, 2014-05-29/30

Marco Battilana	Hupac
Onorato Zanini	Hupac
Juraj Jagelcak	University of Žilina
Sven Sökjer-Petersen	MariTerm AB

Cologna, DUSS Köln-Eifeltor, 2014-06-02/03

Eric Feyen	UIRR
Ullrich Lück	Kombiverkehr
Kristian Kölsche	Kombiverkehr
Sven Sökjer-Petersen	MariTerm AB

Lübeck, Baltic Rail Gate, 2014-06-11/12

Eric Feyen	UIRR
Francois Crelo	CFL Cargo
Antje Falk	Baltic Rail Gate
Francesco Garrisi	Trenitalia
Jens Taron	DB Schenker
Roman Embacher	RCA
Urs Dannenhauer	SBB Cargo
Sven Sökjer-Petersen	MariTerm AB

Inspected units

In the table below, the number of inspected units at each terminal is listed.

Terminal	Date	Trailers	Swap bodies	Containers	Total
Verona, Interterminal Quadrante Servizi	2014-05-22/23	19	11	-	30
Antwerpen, IFB terminal	2014-05-27	-	11	4	15
Genk, Euro Terminal	2014-05-27	7	1	-	8
Novara, Novara CIM	2014-05-29	1	2	-	3
Busto, Busto Arsizio-Gallarate	2014-05-29/30	8	4	3	15
Cologna, DUSS Köln-Eifeltor	2014-06-02/03	24	7	-	31
Lübeck, Baltic Rail Gate	2014-06-11/12	29	-	-	29
Total		**88**	**36**	**7**	**131**

Summary of results

Limiting accelerations

Through analysis of the cargo securing arrangements, the limiting acceleration in each direction has been established for the cargo in each loading unit. The limiting acceleration is defined as the static acceleration at which it is estimated that the cargo securing arrangement will fail and the cargo will shift. For cargo that has been blocked against a sufficiently strong device, the limiting acceleration has been noted as more than 1.0 g.

The diagram below shows the **accumulated** percentage of limiting accelerations, i.e. for each acceleration level the diagram shows the percentage of cargo that is secured against that **or a higher** static acceleration.

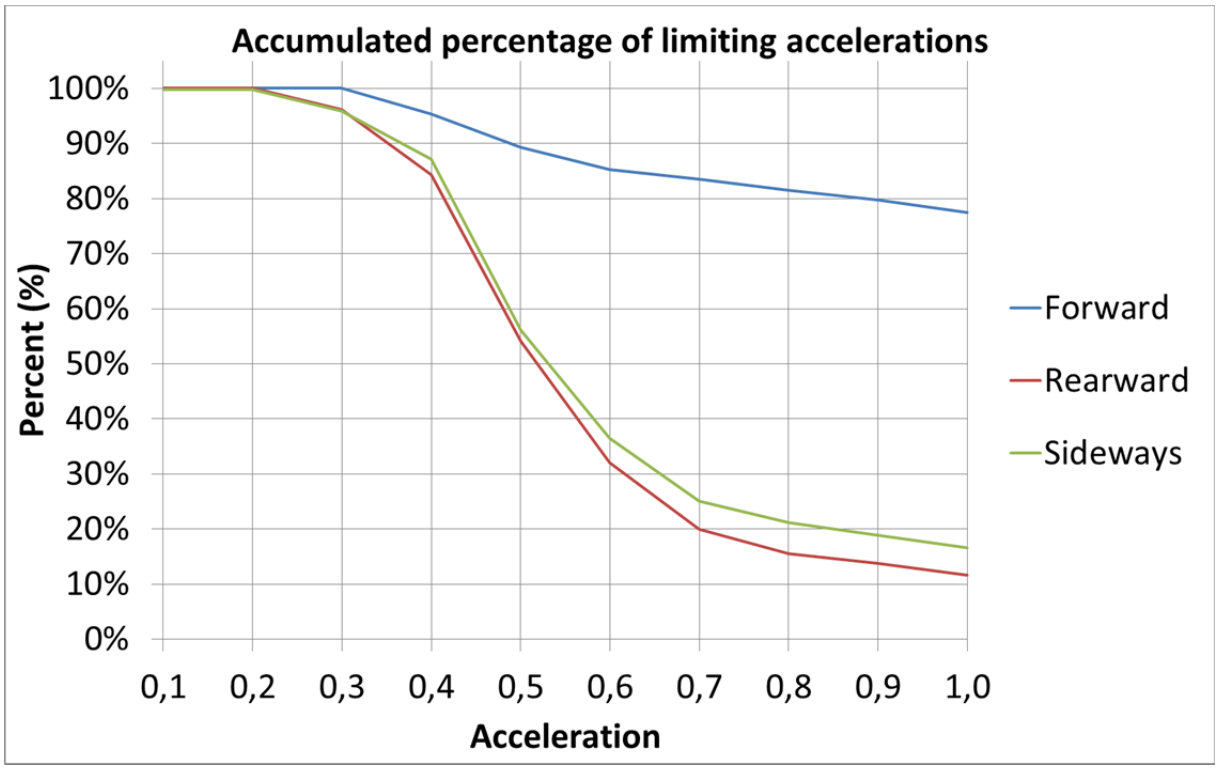

*Diagram showing the **accumulated** percentage of cargo that would **not** shift at different static acceleration levels in each direction for all **inspected** units.*

As can be seen in the diagram 78% of the cargo would withstand a static acceleration of 1.0 g in the forward direction, while only 12% of the cargo would survive such acceleration in the rearward direction. Remarkably, only 54% would actually withstand a static acceleration of 0.5 g in the rearward direction.

The big difference in limiting accelerations to the front and to the rear comes from the fact that most cargo had been blocked in the forward direction but not backwards.

The analysis shows that securing sideways and to the rear is done to approximately the same extent. It has been calculated that 57% of the cargo would withstand a static acceleration sideways of 0.5 g. It should however be noticed that since blocking against curtain sides is not allowed according to current UIC guidelines, no effect of this type of trailer side has been considered in the calculations.

Although a less than satisfying percentage of the cargo is secured for a static acceleration of 0.5 g in the sideways direction and to the rear, approximately 85% of the cargo is secured for accelerations up to 0.4 g. In the dynamic test transports, which were performed in parallel to the inspections described herein, it was noticed that the cargo unit in the swap body that was secured for 0.4 g only moved a few centimetres during each leg.

When the statistics is broken down for each type of loading unit, it can be seen that difference in securing level in the forward and backward direction is biggest for trailers and swap bodies. For containers the securing efficiency is the same in both directions.

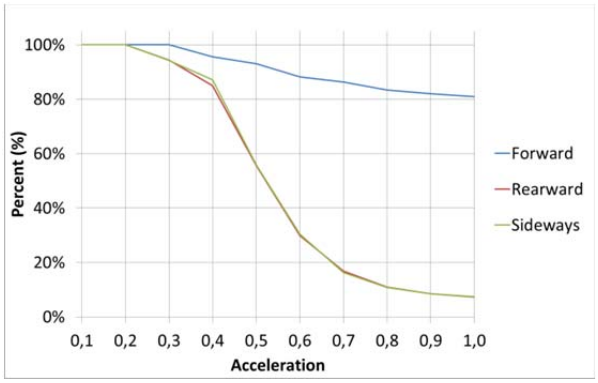

*Limiting accelerations for **trailers***

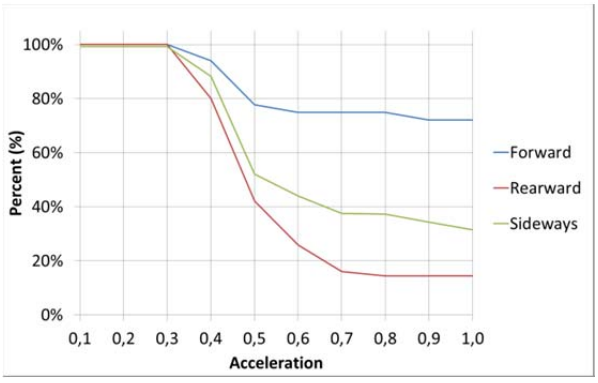

*Limiting accelerations for **swap bodies***

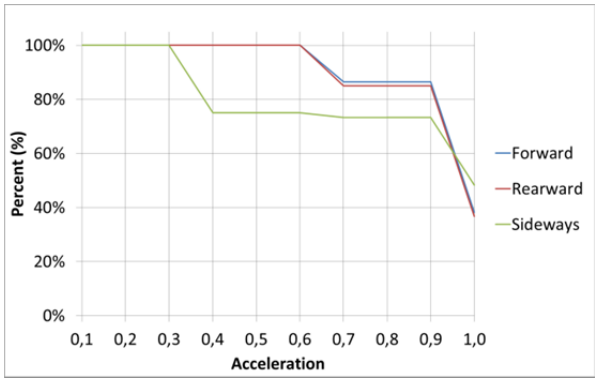

*Limiting accelerations for **containers***

Blocking

76% of the cargo was blocked in the forward direction while only 10% of the cargo in the 131 inspected units where blocked in the rearward direction. The cargo was blocked sideways against legal blocking devices in 11% of the units. In 14% of the units, curtain sides in units built in accordance with the standard EN 12195-XL was used to block cargo which had not otherwise been secured to withstand a sideways acceleration of 0.5 g.

BLOCKING		
Forward		76%
Rearward		10%
Sideways	Rigid blocking devices	11%
	XL curtain siders	14%

Other observations

During the inspections it was noticed that in many loading units, anti-slip material such as rubber mats was available but had not been used.

Since actual lashing forces were measured, the inspections were able to show that, in most cases, the lashings were not tensioned to their marked value of pre-tension. This means that most lashings were not used in an optimal way. The reason why the lashings showed such low pre-tension values are most likely a combination of faulty appliance, settling of cargo and the lack of retightening efforts.



Loose chain lashing



Attempted blocking



Poor utilization of securing equipment

Conclusions

The results of the inspections clearly show that cargo is secured more thoroughly in the forward direction than to the rear. Only approximately half the cargo is secured for a static acceleration of 0.5 g or more and only 12% of the cargo is secured for the current design acceleration of 1.0 g to the rear. Blocking is 7.5 times more common in the forward direction than to the rear.

If there were frequent accelerations of 0.5 g with a noticeable duration in the longitudinal direction, some 50% of the cargo would shift towards the rear. In the dynamic test transports, which were performed in parallel to the inspections described herein, it was noticed that the only cargo unit that moved any noticeable distance was the unit in the swap body that was secured for 0.4 g. Thus, as a combined result from the inspections and the test transports, it can be concluded that shocks that have an impulse that corresponds to a static acceleration of 0.5 g or more is very rear during combined transports by rail.

The results of the inspection also show that securing in the sideways and in the rearward direction is done to approximately the same extent. Considering that the current design acceleration in the sideways direction according to UIC Loading Guidelines is 0.5 g, it cannot be considered an increase risk to have the same design acceleration in the longitudinal direction.

However, since a great portion of the cargo is not secured against 0.5 g sideways and backward, efforts should be made to educate personnel responsible for loading and securing cargo for combined transports to meet such a requirement. As seen during the inspections, the level of cargo securing can be improved significantly simply by making proper use of the material and equipment already available. The lack of tension in lashing can to some extent be avoided by proper handling of tensioning devices, the use of bigger and more rigid corner protectors on soft cargo and retightening of lashings. Friction can be increased by using already available friction enhancing material.

In conclusion, the combined results of the test transports and the inspections within the DESTINY project show that a static design acceleration of 0.5 g in the longitudinal direction can be used for intermodal rail transports without increasing the risk of accidents due to shift of cargo, as long as the wagons are not subjected to hump and fly shunting.

Appendix – Documentation of inspected units

Verona no. 1

1. Cargo transport unit

Type: Trailer, cover/stake, non-XL

Floor: Plyfa

2. Cargo

Description of cargo: Steel pipes/profiles (mixed), oiled, plastic covered

Number of pieces: 34 *pcs*

Total weight: 26 *ton*

3. Securing

Friction factor: 0.2

Number of lashings: 11 *top-over lashings*

Pre-tension in lashings: 300 *daN*

The steel pipes/profiles are blocked sideways against stanchions.

4. Sketch

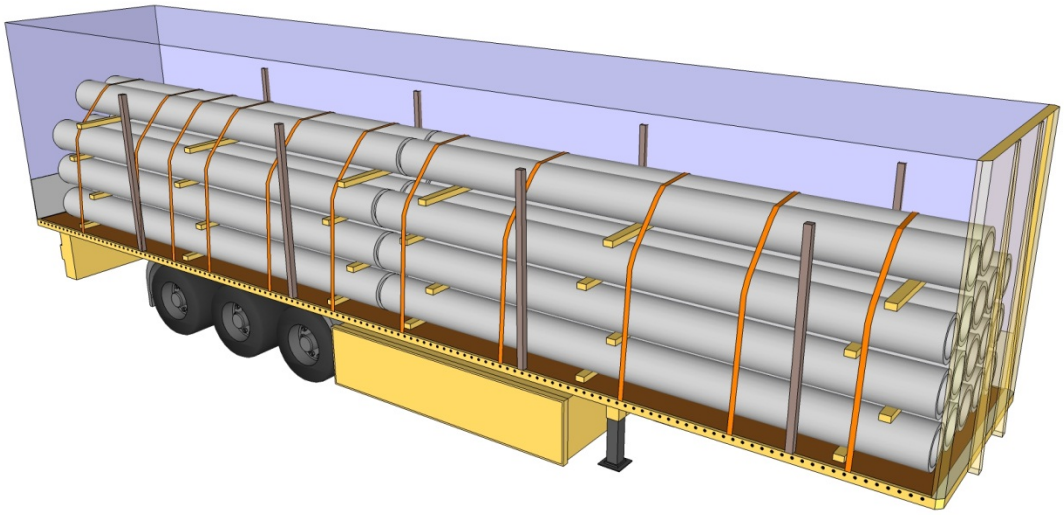

5. Estimated allowable acceleration

Forward: Blocked against headboard

Rearward: 0.24 g

Sideways: Blocked against stanchions (88% of cargo weight) and 0.24 g (12%)

Verona no. 2

1. Cargo transport unit

Type:	Trailer, curtainsider, XL	
Floor:	Plyfa	

2. Cargo

Description of cargo:	Paper reels, standing	
Number of pieces:	7	*pcs*
Total weight:	22.6	*ton*

3. Securing

Friction factor:	0.5	
Number of lashings:	14	*top-over lashings (2 per reel in cross)*
Pre-tension in lashings:	275	*daN*

4. Sketch

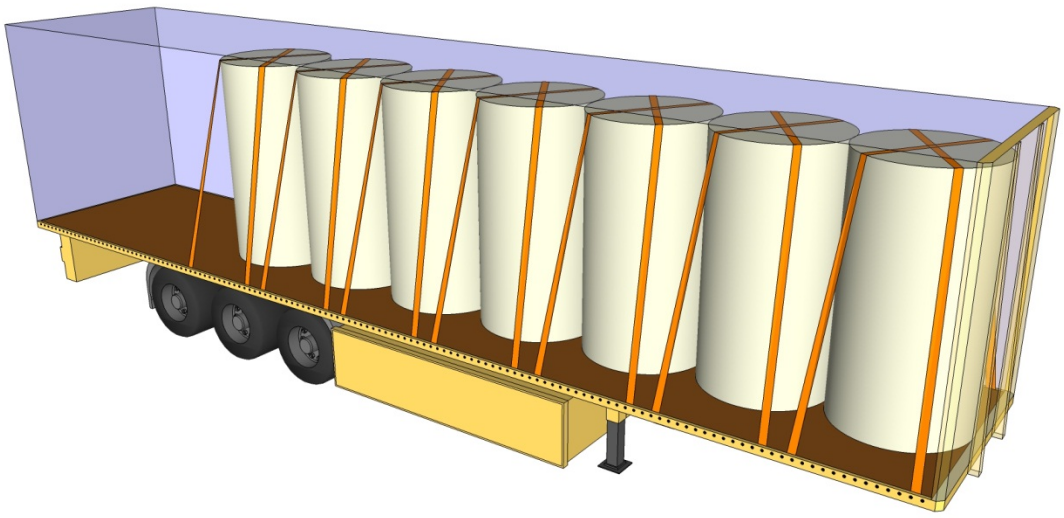

5. Estimated allowable acceleration

Forward:	Blocked against headboard
Rearward:	0.65 g
Sideways:	0.65 g

Verona no. 3

1. Cargo transport unit

Type:	Trailer, curtainsider, non-XL
Floor:	Plyfa

2. Cargo

Description of cargo:	Bags (approx. 50 kg) on pallet (Perstorp sodium)	
Number of pieces:	22	*pcs*
Total weight:	25	*ton*

3. Securing

Friction factor:	0.45	
Number of lashings:	11	*top-over lashings (1 per section)*
Pre-tension in lashings:	175	*daN*

4. Sketch

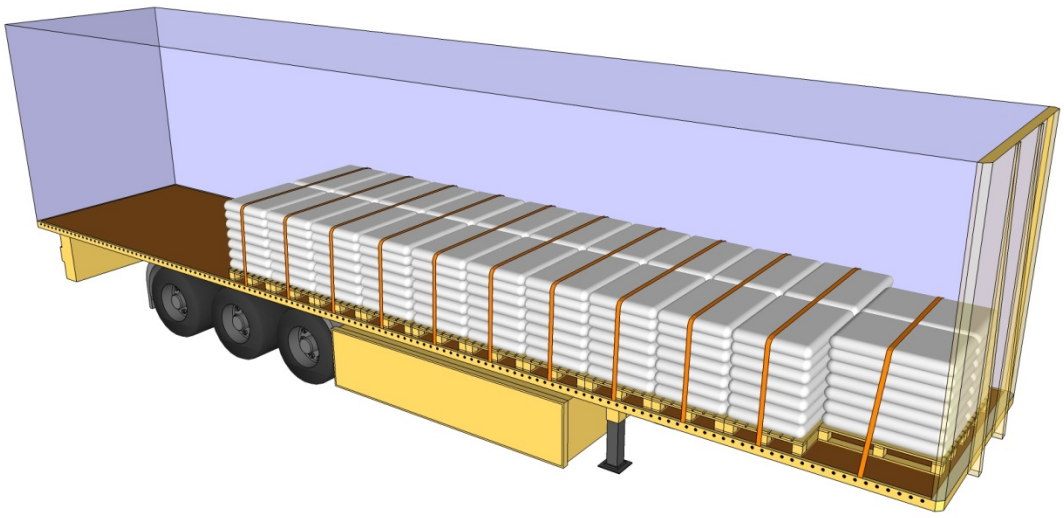

5. Estimated allowable acceleration

Forward:	Blocked against headboard
Rearward:	0.51 g
Sideways:	0.51 g

Verona no. 4

1. Cargo transport unit

Type:	Trailer, curtainsider, XL
Floor:	Plyfa

2. Cargo

Description of cargo:	Cars (2 pcs.), washing machines on pallet (4 machines on 3 pallets)	
Number of pieces:	-	*pcs*
Total weight:	5.6	*ton* (2 × 2.5 + 4 × 0.15)

3. Securing

Friction factor:	0.6 / 0.3	
Number of lashings:	8	*straight lashings (4 per car)*
	4	*top-over lashings (1 per washing machine)*
Pre-tension in lashings:	350	*daN*
Strength in lashings, LC:	2000	*daN*

4. Sketch

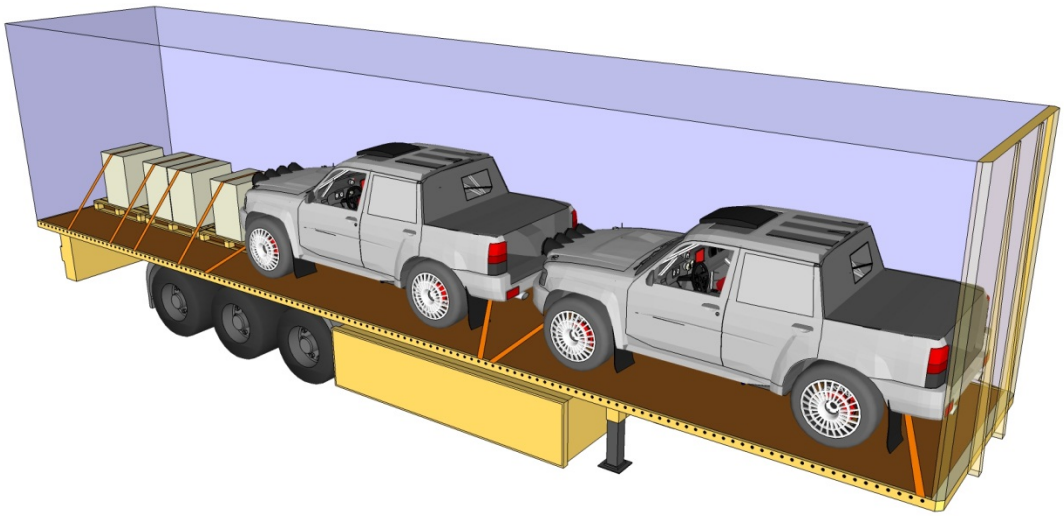

5. Estimated allowable acceleration

Forward:	1.91 g
Rearward:	1.91 g
Sideways:	2.09 g

Verona no. 5

1. Cargo transport unit

Type:	Trailer, curtainsider, XL
Floor:	Plyfa

2. Cargo

Description of cargo:	Paper reels, standing	
Number of pieces:	24	*pcs*
Total weight:	21.6	*ton*

3. Securing

Friction factor:	0.5	
Number of lashings:	7 (9)	*top-over lashings (1 per section)*
Pre-tension in lashings:	250	*daN*

Note that 2 top-over lashings were slack and are not included in the calculations

4. Sketch

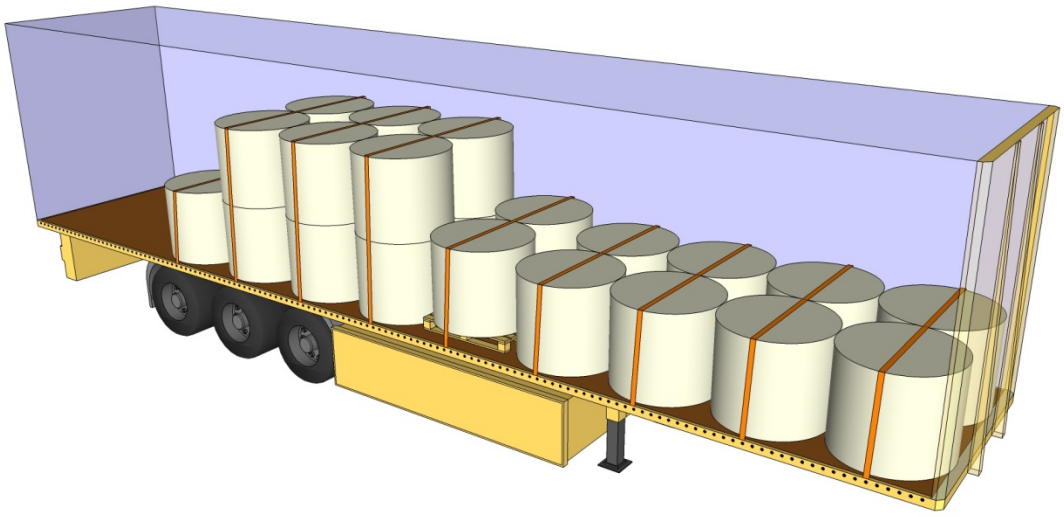

5. Estimated allowable acceleration

Forward:	Blocked against headboard
Rearward:	0.57 g
Sideways:	0.57 g (blocked against XL sides)

Verona no. 6

1. Cargo transport unit

Type: Trailer, cover/stake, non-XL

Floor: Plyfa

2. Cargo

Description of cargo: Steel pipes, stainless steel, on transverse beams

Number of pieces: 12 *bunts*

Total weight: 26 *ton*

3. Securing

Friction factor: 0.35

Number of lashings: 11 *top-over lashings*

Pre-tension in lashings: 450 *daN*

Note that the two front sections were blocked against stanchions.

4. Sketch

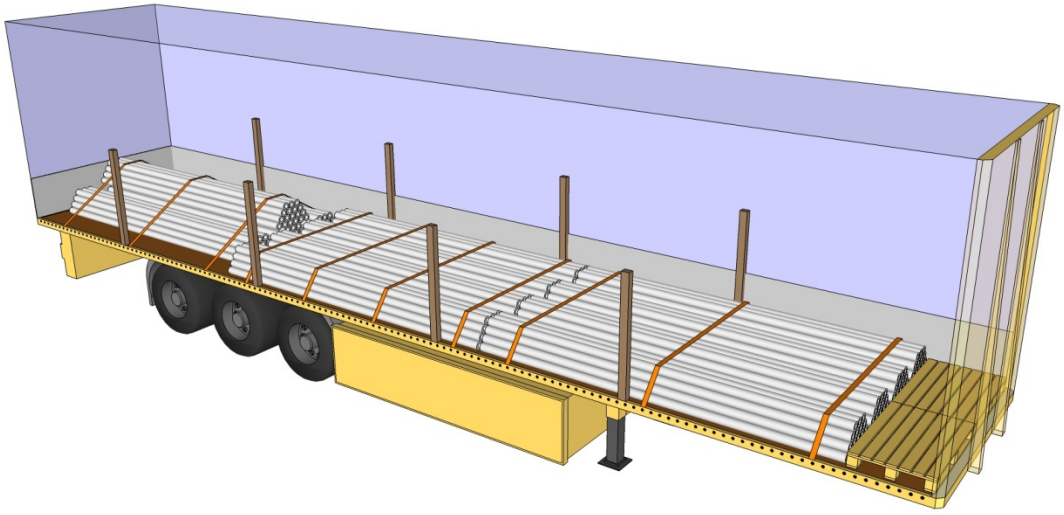

5. Estimated allowable acceleration

Forward: Blocked against headboard

Rearward: 0.43 g

Sideways: Blocked against stanchions (66%) and 0.42 g (33 %)

Verona no. 7

1. Cargo transport unit

Type:	Trailer, curtainsider, XL	
Floor:	Plyfa	

2. Cargo

Description of cargo:	Paper reels, standing, zig-zag	
Number of pieces:	17	*pcs*
Total weight:	24.7	*ton*

3. Securing

Friction factor:	0.5	
Number of lashings:	7	*top-over lashings*
Pre-tension in lashings:	250	*daN*

4. Sketch

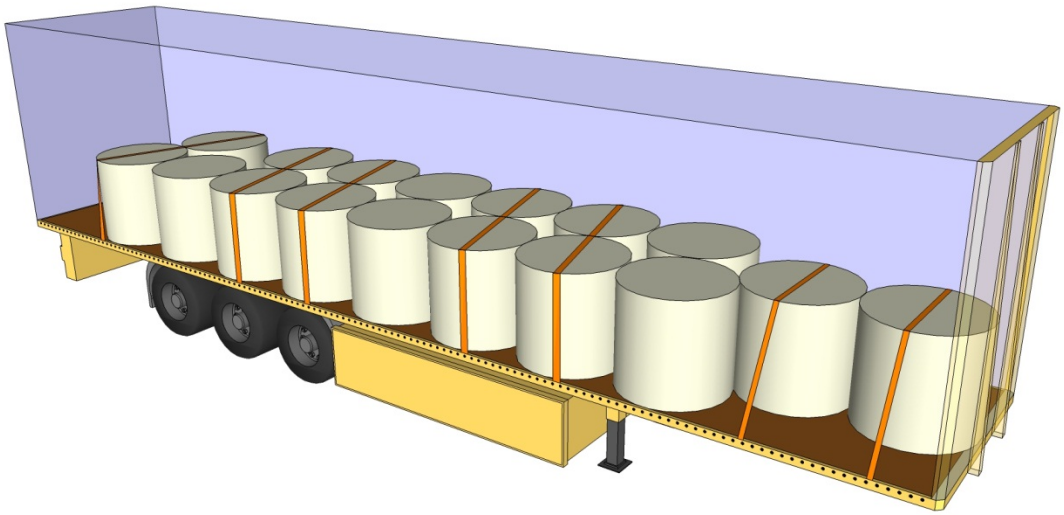

5. Estimated allowable acceleration

Forward:	≥ 1.0 g
Rearward:	0.56 g
Sideways:	0.56 g (88% also blocked against the XL sides)

Verona no. 8

1. Cargo transport unit

Type:	Trailer, curtainsider, XL	
Floor:	Plyfa	

2. Cargo

Description of cargo:	Copy paper on pallet	
Number of pieces:	32	*Pcs*
Total weight:	22.4	*ton*

3. Securing

Friction factor:	0.45	
Number of lashings:	11	*top-over lashings*
Pre-tension in lashings:	300	*daN*

4. Sketch

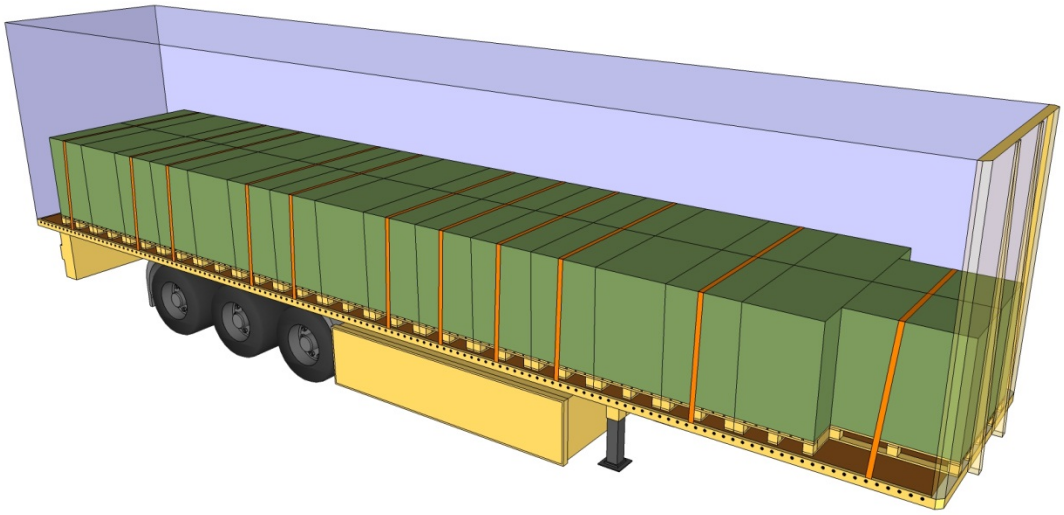

5. Estimated allowable acceleration

Forward:	Blocked against headboard
Rearward:	0.57 g
Sideways:	0.45 g (31%), 0.51 (69%)

Verona no. 9

1. Cargo transport unit

Type:	Trailer, curtainsider, XL	
Floor:	Plyfa	

2. Cargo

Description of cargo:	Paper reels, standing in bottom, laying on top	
Number of pieces:	35	*pcs*
Total weight:	21	*ton*

3. Securing

Friction factor:	0.5	
Number of lashings:	12	*top-over lashings*
Pre-tension in lashings:	300	*daN*

4. Sketch

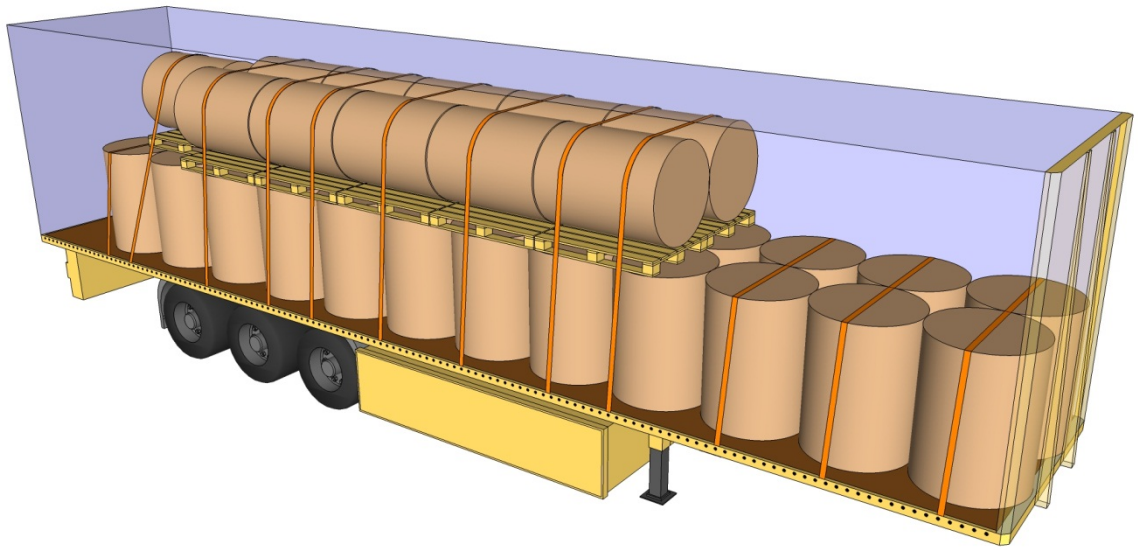

5. Estimated allowable acceleration

Forward:	0.71 g
Rearward:	0.63 g
Sideways:	0.61 g (83%), 0.72 g (17%)

Verona no. 10

1. Cargo transport unit

Type:	Trailer, curtainsider, XL	
Floor:	Plyfa	

2. Cargo

Description of cargo:	Pallet cargo, flooring	
Number of pieces:	34	*pcs*
Total weight:	26.7	*ton*

3. Securing

Friction factor:	0.45	
Number of lashings:	16	*top-over lashings*
Pre-tension in lashings:	300	*daN*

4. Sketch

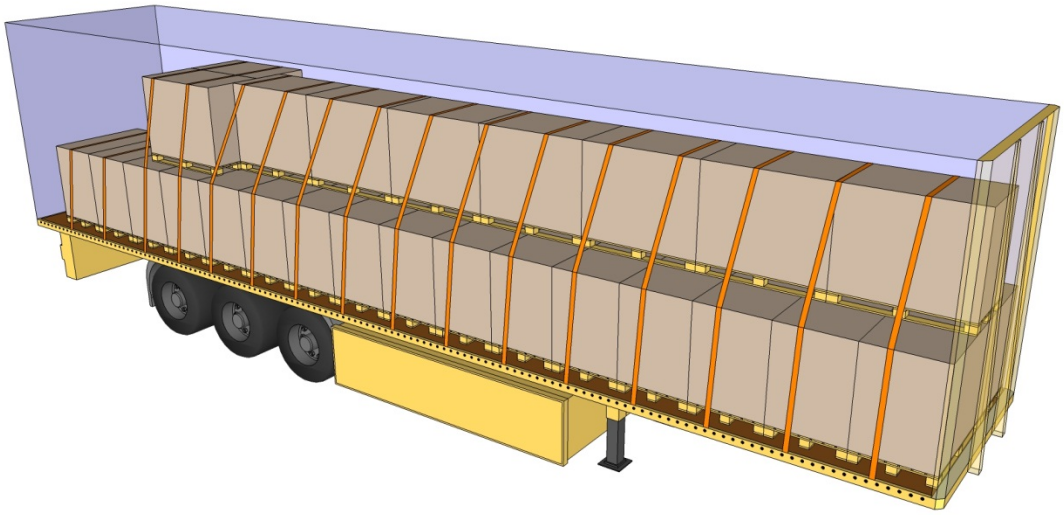

5. Estimated allowable acceleration

Forward:	Blocked against headboard
Rearward:	0.59 g
Sideways:	0.59 g

Verona no. 11

1. Cargo transport unit

Type:	Trailer, curtainsider, XL	
Floor:	Plyfa	

2. Cargo

Description of cargo:	Paper reels, standing, zig-zag	
Number of pieces:	26	*pcs*
Total weight:	27.3	*ton*

3. Securing

Friction factor:	0.5	
Number of lashings:	9	*top-over lashings*
Pre-tension in lashings:	500	*daN*

4. Sketch

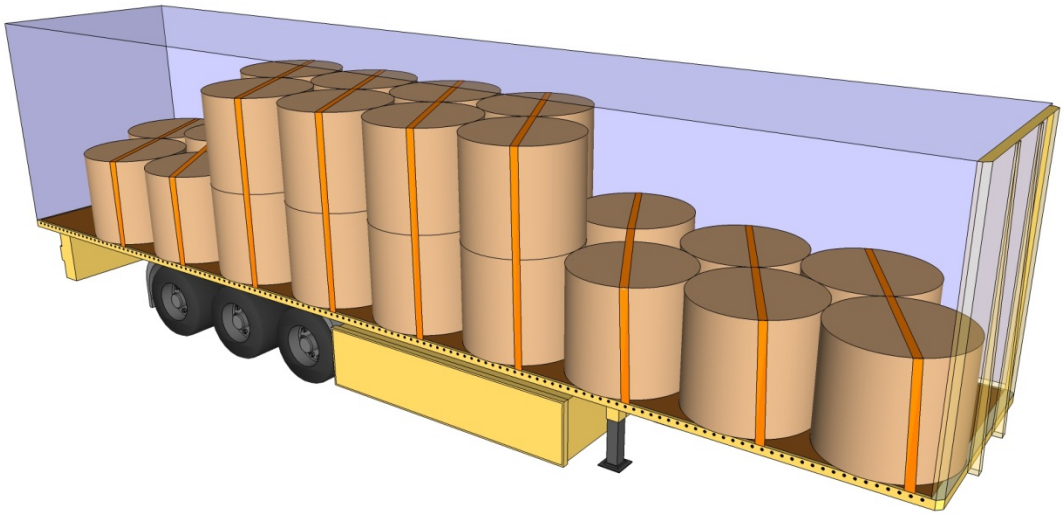

5. Estimated allowable acceleration

Forward:	Blocked against headboard
Rearward:	0.65 g
Sideways:	0.65 g (also blocked against the XL sides)

Verona no. 12

1. Cargo transport unit

Type:	Trailer, curtainsider, XL	
Floor:	Plyfa	

2. Cargo

Description of cargo:	Paper reels, standing	
Number of pieces:	7	*pcs*
Total weight:	23.8	*ton*

3. Securing

Friction factor:	0.5	
Number of lashings:	14	*top-over lashings*
	1	*spring lashing forward*
Pre-tension in lashings:	300	*daN*
Strength in lashings, LC:	2000	*daN*

4. Sketch

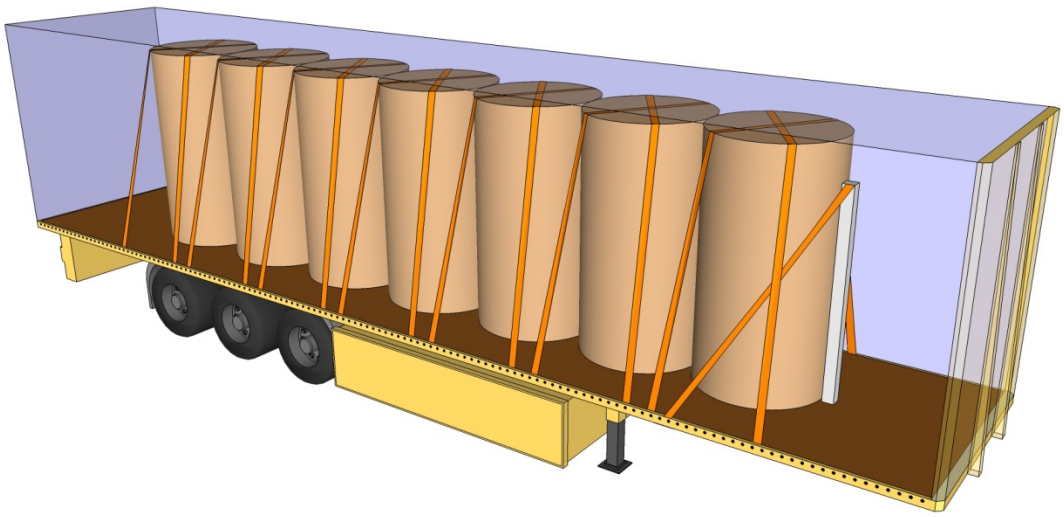

5. Estimated allowable acceleration

Forward:	0.65 g
Rearward:	0.66 g
Sideways:	0.66 g

Verona no. 13

1. Cargo transport unit

Type: Trailer, curtainsider, XL

Floor: Plyfa

2. Cargo

Description of cargo: Pallet cargo

Number of pieces: undefined *pcs*

Total weight: 25 *ton*

3. Securing

Friction factor: 0.45

Number of lashings: 1 *spring lashing rearward*

Pre-tension in lashings: - *daN*

The spring lashing was attached to the stake and is not included in the calculations

4. Sketch

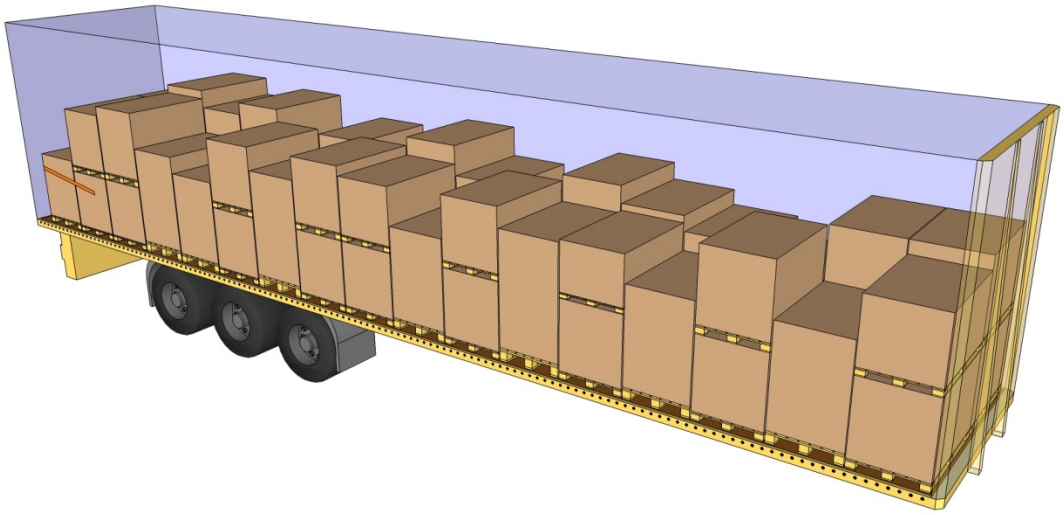

5. Estimated allowable acceleration

Forward: Blocked against headboard

Rearward: 0.45

Sideways: 0.45

Verona no. 14

1. Cargo transport unit

Type:	Swap body 20 ft, cover/stake
Floor:	Plyfa

2. Cargo

Description of cargo:	Laying steel coils, in cradle 40° inclination	
Number of pieces:	3	*pcs*
Total weight:	9.1	*ton*

3. Securing

Friction factor:	0.6	*rubber between coil and cradle*
Number of lashings:	4	*top-over lashings*
	4	*"loop-spring lashings (2 per section)*
Pre-tension in lashings:	350	*daN*
Strength in lashings, LC:	2000	*daN*

4. Sketch

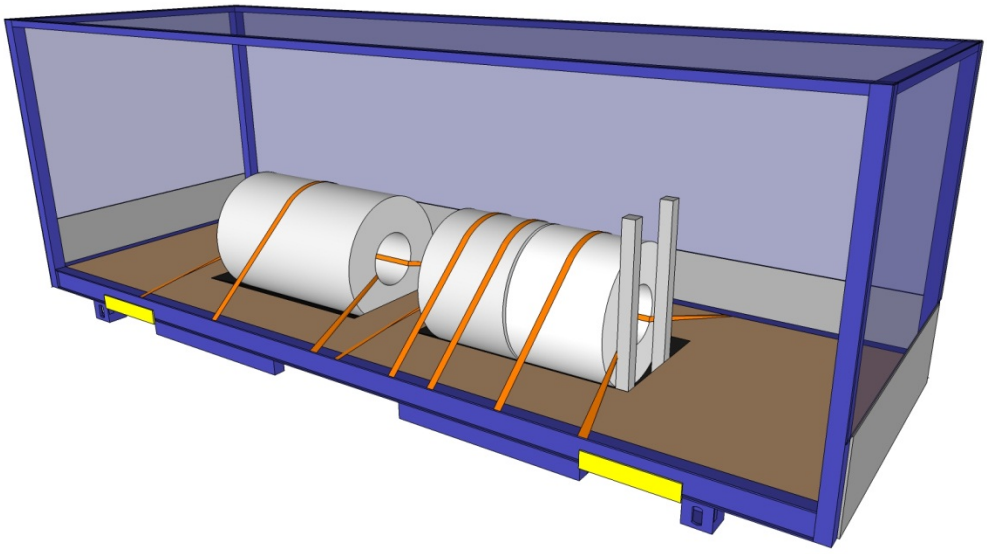

5. Estimated allowable acceleration

Forward:	Blocked
Rearward:	Blocked
Sideways:	≥ 1.0 g

Verona no. 15

1. Cargo transport unit

Type: Trailer, box type, non-XL

Floor: Groove metal

2. Cargo

Description of cargo: Pallets, cream

Number of pieces: 64 *pcs*

Total weight: 10 *ton*

3. Securing

Friction factor: 0.4 / 0.5

Number of lashings: - *top-over lashings*

Pre-tension in lashings: - *daN*

4. Sketch

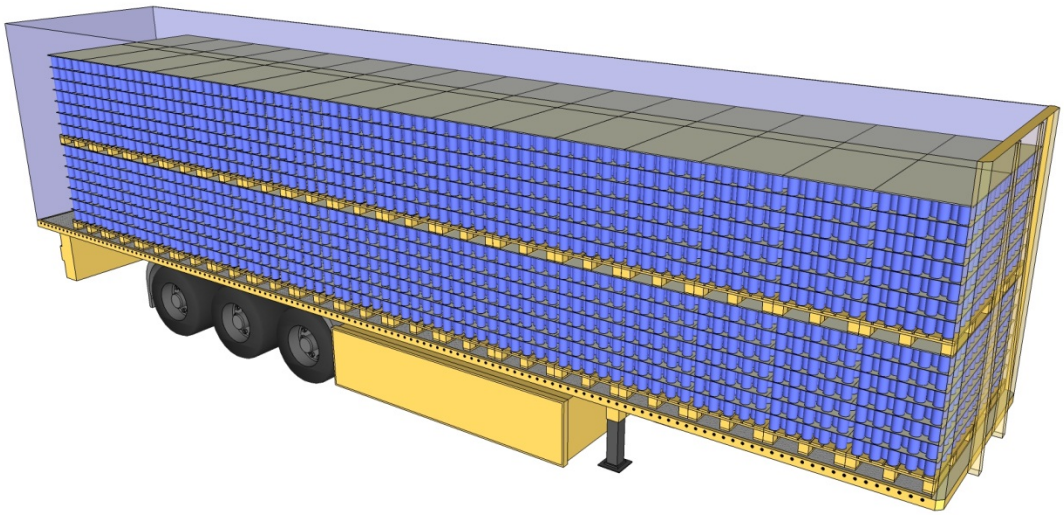

5. Estimated allowable acceleration

Forward: Blocked against headboard

Rearward: 0.4 g

Sideways: 0.4 g

Verona no. 16

1. Cargo transport unit

Type:	Trailer, curtainsider, XL	
Floor:	Plyfa	

2. Cargo

Description of cargo:	Paper reels, standing	
Number of pieces:	7	*pcs*
Total weight:	23.8	*ton*

3. Securing

Friction factor:	0.5	
Number of lashings:	8	*top-over lashings*
Pre-tension in lashings:	125	*daN*

4. Sketch

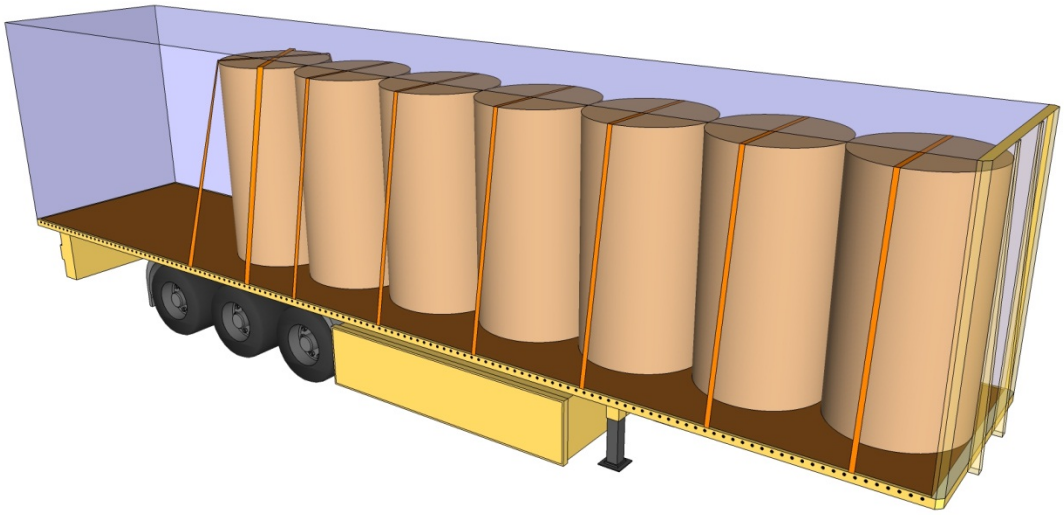

5. Estimated allowable acceleration

Forward:	Blocked against headboard
Rearward:	0.53 g
Sideways:	0.53 g (86%), 0.57 (14%)

Verona no. 17

1. Cargo transport unit

Type:	Swap body 40 ft., cover/stake	
Floor:	Plyfa	

2. Cargo

Description of cargo:	Steel coils, laying	
Number of pieces:	2	*pcs*
Total weight:	22.8	*ton*

3. Securing

Friction factor:	0.3	
Number of lashings:	2	*top-over lashings (1 per coil)*
	2	*loop-spring lashings*
Pre-tension in lashings:	300	*daN*
Strength in lashings, LC:	4000	*daN*

4. Sketch

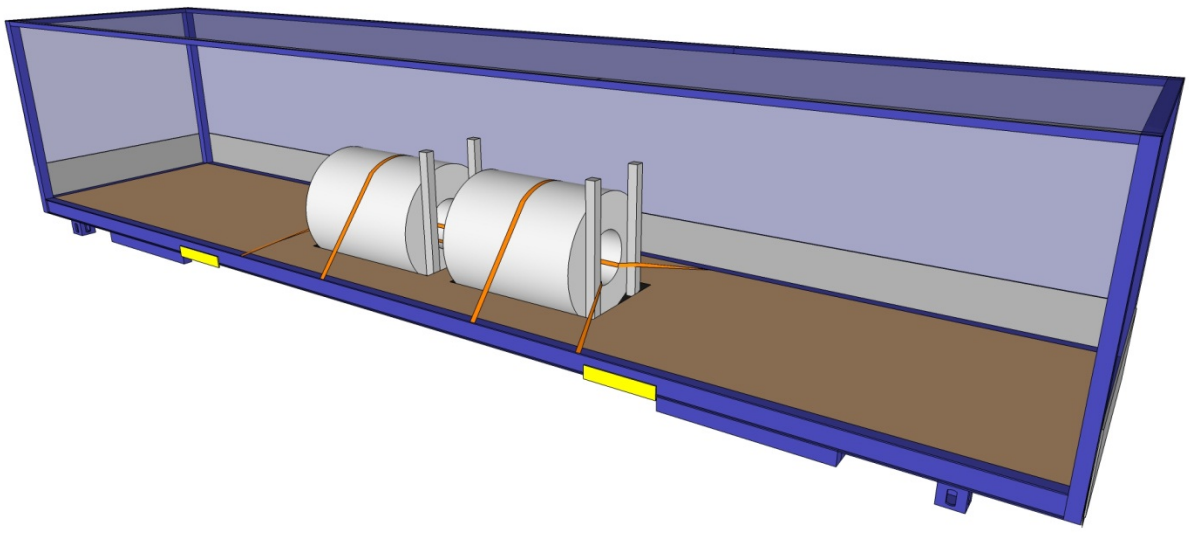

5. Estimated allowable acceleration

Forward:	Blocked against stanchions
Rearward:	Blocked against sheets
Sideways:	0.99 g

Verona no. 18

1. Cargo transport unit

Type: Swap body 40 ft., cover/stake

Floor: Plyfa

2. Cargo

Description of cargo: Steel coils, standing on pallet

Number of pieces: 7 *pcs*

Total weight: 24.1 *ton*

3. Securing

Friction factor: 0.45

Number of lashings: 7 *top-over lashings (1 per coil)*

Pre-tension in lashings: 300 *daN*

4. Sketch

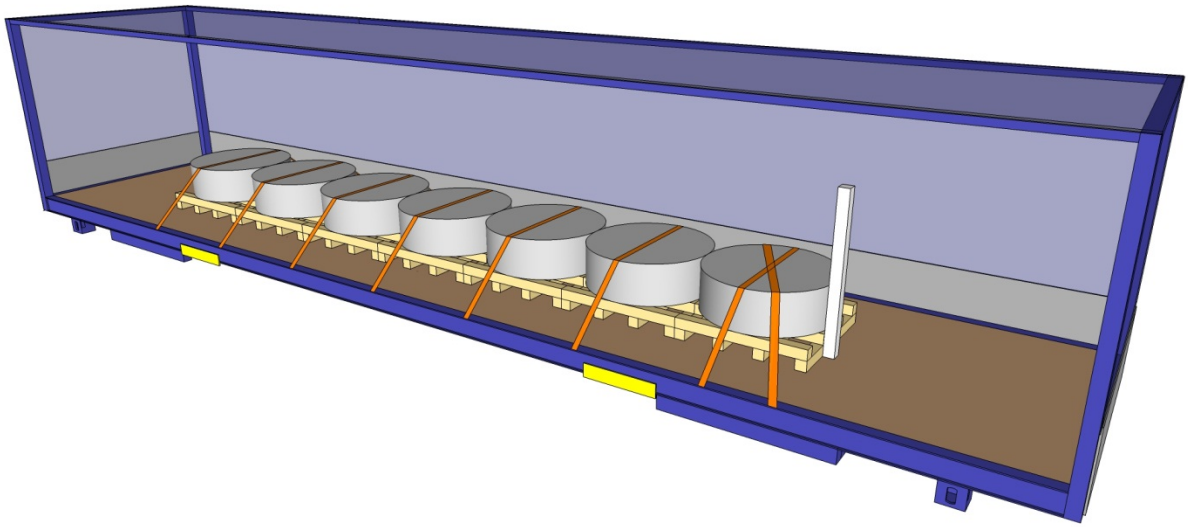

5. Estimated allowable acceleration

Forward: Blocked against stanchion

Rearward: 0.5 g

Sideways: 0.5 g

Verona no. 19

1. Cargo transport unit

Type: Trailer, cover/stake, non-XL

Floor: Plyfa

2. Cargo

Description of cargo: Steel beams in bunts

Number of pieces: 15 *pcs*

Total weight: 23.3 *ton*

3. Securing

Friction factor: 0.3

Number of lashings: 11 *top-over lashings*

Pre-tension in lashings: 100 *daN*

Blocking against side stanchions and the long beams against stanchions in the front

4. Sketch

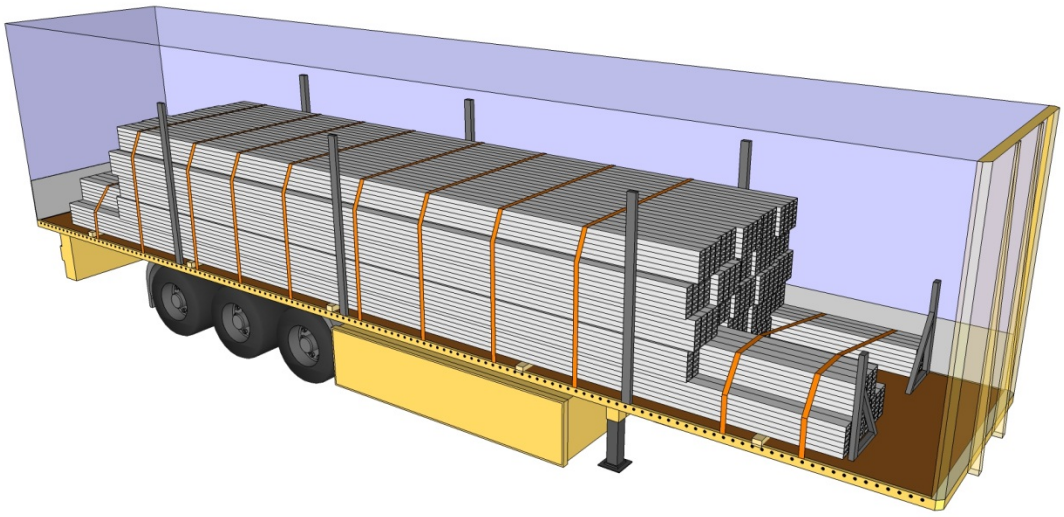

5. Estimated allowable acceleration

Forward: Blocked against stanchions (≈ 50%), 0.33 g (50%)

Rearward: 0.33 g

Sideways: Blocked against side stanchions (83%), 0.41 g (17%)

Verona no. 20

1. Cargo transport unit

Type:	Swap body 20 ft., cover/stake
Floor:	Plyfa

2. Cargo

Description of cargo:	Steel coil in cradle with 40° inclination	
Number of pieces:	1	*pcs*
Total weight:	19.2	*ton*

3. Securing

Friction factor:	0.6	*rubber between coil and cradle*
Number of lashings:	1	*top-over lashing*
	2	*loop-spring lashings*
Pre-tension in lashings:	400	*daN*
Strength in lashings, LC:	4000	*daN*

4. Sketch

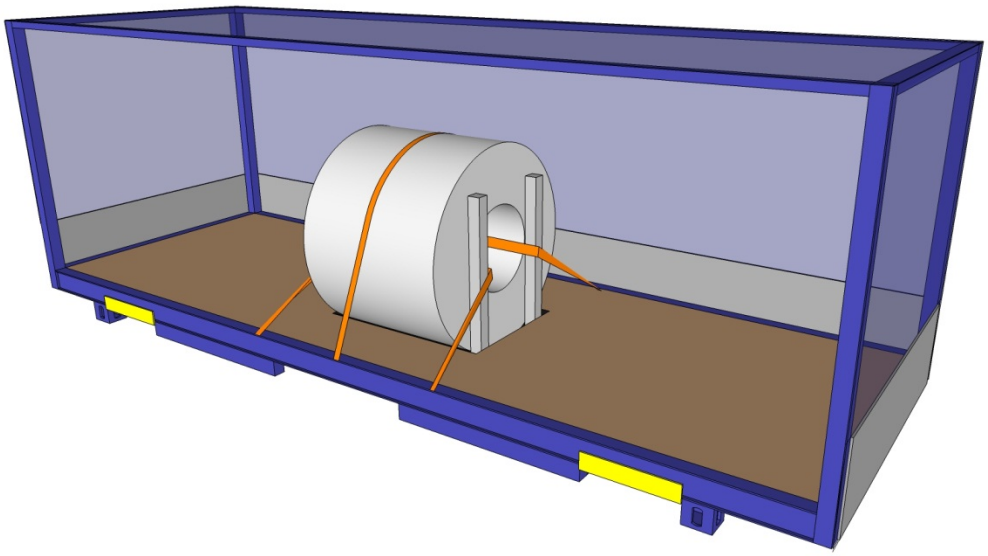

5. Estimated allowable acceleration

Forward:	Blocked against stanchions
Rearward:	0.62 g
Sideways:	1.13 g

Verona no. 21

1. Cargo transport unit

Type:	Swap body 45 ft., curtainsider, non-XL	
Floor:	Plyfa+steel	

2. Cargo

Description of cargo:	Pallet cargo	
Number of pieces:	undefined	*pcs*
Total weight:	23	*ton*

3. Securing

Friction factor:	0.45 / 0.3	*average friction value is estimated to 0.38*
Number of lashings:	-	*top-over lashings*
Pre-tension in lashings:	-	*daN*

4. Sketch

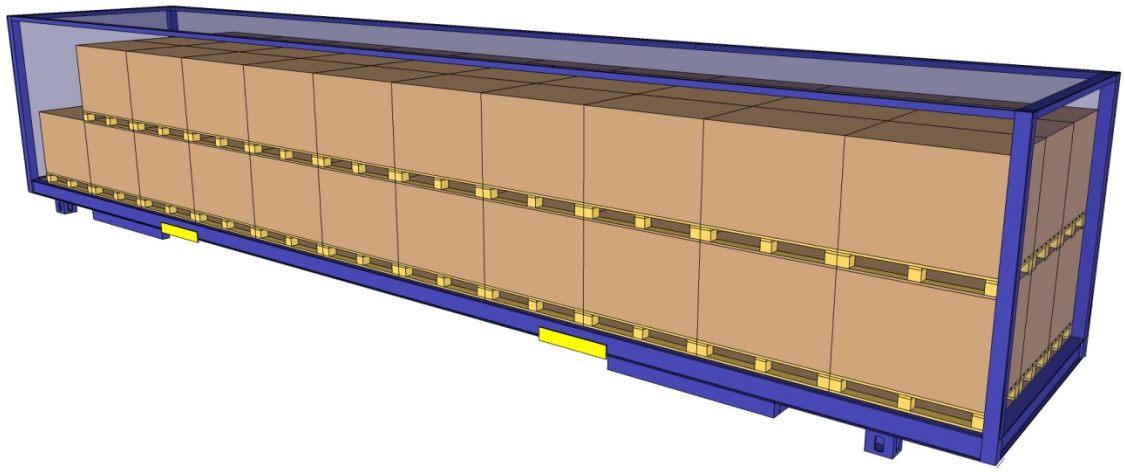

5. Estimated allowable acceleration

Forward:	Blocked against headboard
Rearward:	0.38 g
Sideways:	0.38 g

Verona no. 22

1. Cargo transport unit

Type:	Swap body 20 ft., cover/stake	
Floor:	Plyfa	

2. Cargo

Description of cargo:	Steel coils, pallets	
Number of pieces:	2+2	*pcs*
Total weight:	21.7	*ton*

3. Securing

Friction factor:	0.45 / 0.6	*rubber between coil and cradle*
Number of lashings:	2	*top-over lashings (pallets)*
	3	*top-over lashings (coils)*
	4	*loop-spring lashings (2 per coil)*
Pre-tension in lashings:	350	*daN*
Strength in lashings, LC:	4000	*daN*

4. Sketch

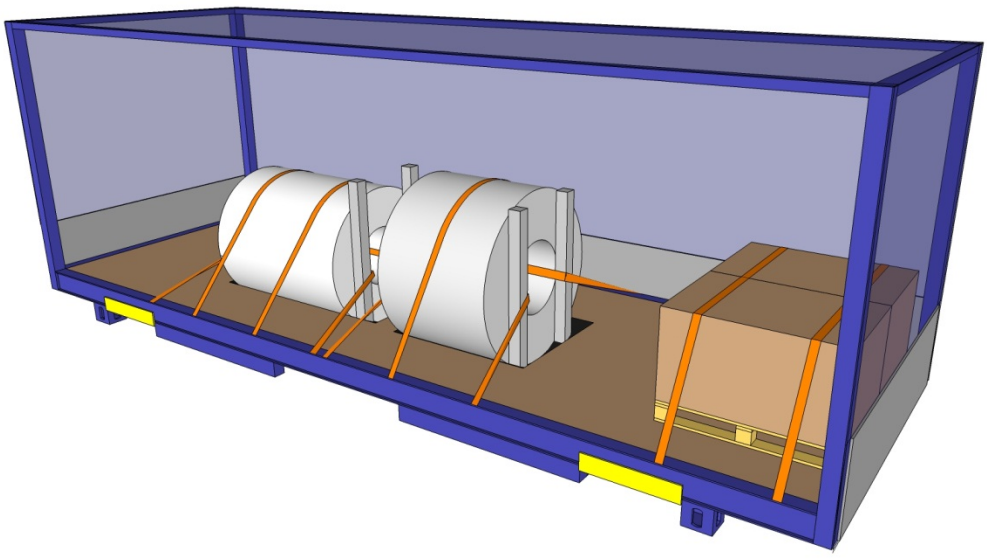

5. Estimated allowable acceleration

Forward:	Blocked against headboard and stanchions
Rearward:	0.71 g (pallets ≈ 10%), 0.66 g (coil 1 ≈ 45%) 0.70 g (coil 2 ≈ 45%)
Sideways:	0.71 g (pallets ≈ 10%), 1.6 g (coils ≈ 90%)

Verona no. 23

1. Cargo transport unit

Type: Swap body 20 ft., cover/stake

Floor: Plyfa

2. Cargo

Description of cargo: Steel bars in bunts, on transverse wooden beams

Number of pieces: 13 *pcs*

Total weight: 27 *ton*

3. Securing

Friction factor: 0.45

Number of lashings: 2 *top-over lashings*

Pre-tension in lashings: 0 *daN*

The chain lashings were slack and are not included in the calculations. The steel bars are blocked against side stanchions.

4. Sketch

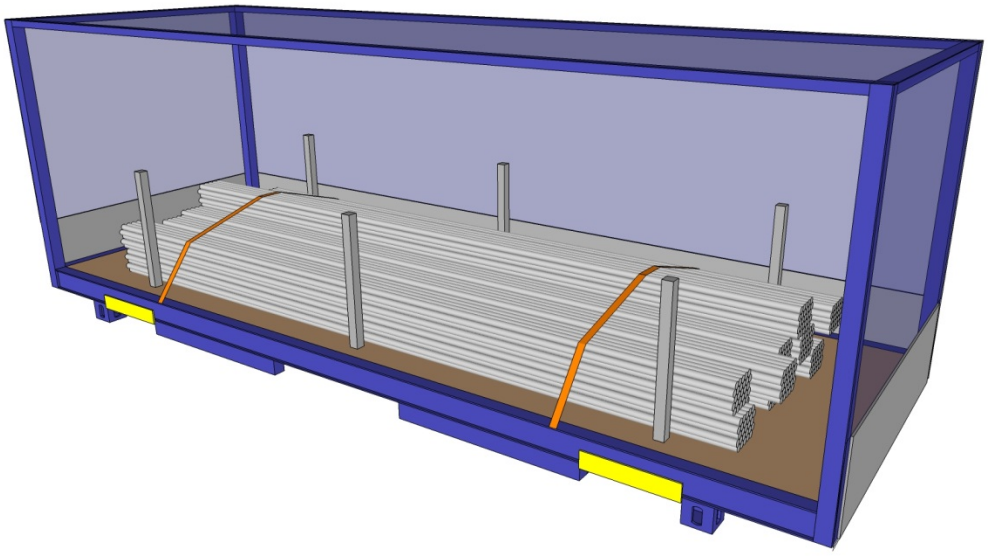

5. Estimated allowable acceleration

Forward: 0.45

Rearward: 0.45

Sideways: Blocked against side stanchions

Verona no. 24

1. Cargo transport unit

Type: Swap body 20 ft., cover/stake

Floor: Plyfa

2. Cargo

Description of cargo: Steel products

Number of pieces: 4 *pcs*

Total weight: 5.1 *ton*

3. Securing

Friction factor: 0.45

Number of lashings: 4 *top-over lashings (including 1 false loop lashing)*

Pre-tension in lashings: 150 *daN*

The false loop lashing on the long box in the middle is not included in the calculations

4. Sketch

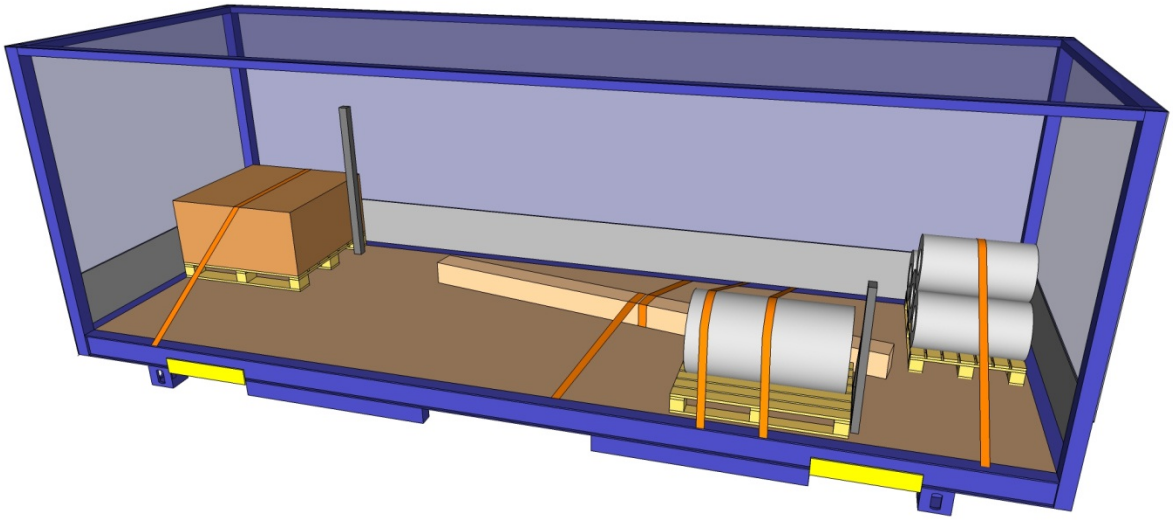

5. Estimated allowable acceleration

Forward: Blocked against end wall/stanchions

Rearward: Blocked against end wall / 0.39 g (coil and cylinder 57%), 0.45 g (long box 4%)

Sideways: 0.61 g (coils 27%), 0.15 g (cylinder 27%), 0.45 g (long box 4%), 0.57 g (box 39%)

Verona no. 25

1. Cargo transport unit

Type: Swap body 20 ft., cover/stake

Floor: Plyfa

2. Cargo

Description of cargo: Cages

Number of pieces: 4×4×3 *pcs*

Total weight: 4.8 *ton*

3. Securing

Friction factor: 0.45

Number of lashings: 2 *spring lashings rearward (with β ≈ 75˚)*

Strength in lashings, LC: 2000 *daN*

4. Sketch

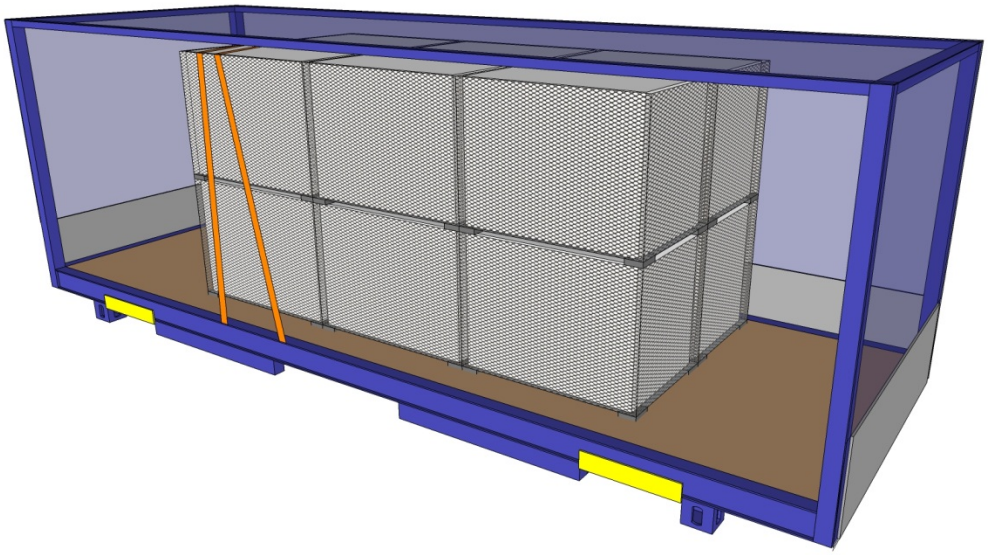

5. Estimated allowable acceleration

Forward: 0.45 g

Rearward: 1.46 g

Sideways: 0.45 g

Verona no. 26

1. Cargo transport unit

Type: Swap body 20 ft., cover/stake

Floor: Plyfa

2. Cargo

Description of cargo: Steel (partly plastic covered) on wooden beams

Number of pieces: - *pcs*

Total weight: 10 *ton*

3. Securing

Friction factor: 0.2 / 0.35

Number of lashings: 4 *top-over lashings (whereof 1 false loop lashing)*

Pre-tension in lashings: 325 *daN*

The small pieces of steel were unsecured.

4. Sketch

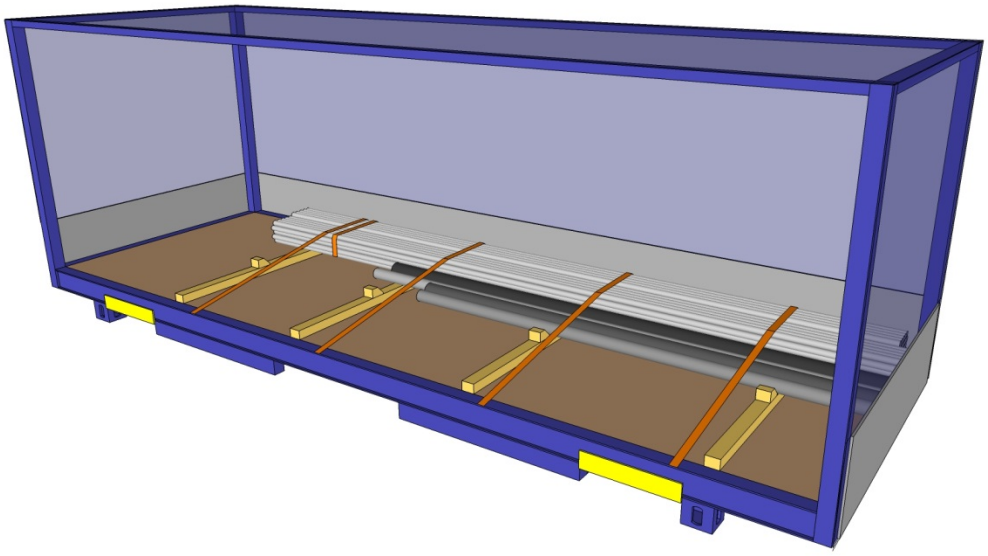

5. Estimated allowable acceleration

Forward: 0.48 g (≈ 25%), 0.35 g (≈ 75%)

Rearward: 0.52 g (≈ 25%), 0.35 g (≈ 75%)

Sideways: 0.52 g (≈ 25%), Blocked by wedges (≈ 75%)

Verona no. 27

1. Cargo transport unit

Type: Trailer., curtainsider, XL

Floor: Plyfa

2. Cargo

Description of cargo: Plastic boxes with car components

Number of pieces: 55 *pcs*

Total weight: 6.5 *ton*

3. Securing

Friction factor: 0.2

Number of lashings: - *top-over lashings*

Pre-tension in lashings: - *daN*

4. Sketch

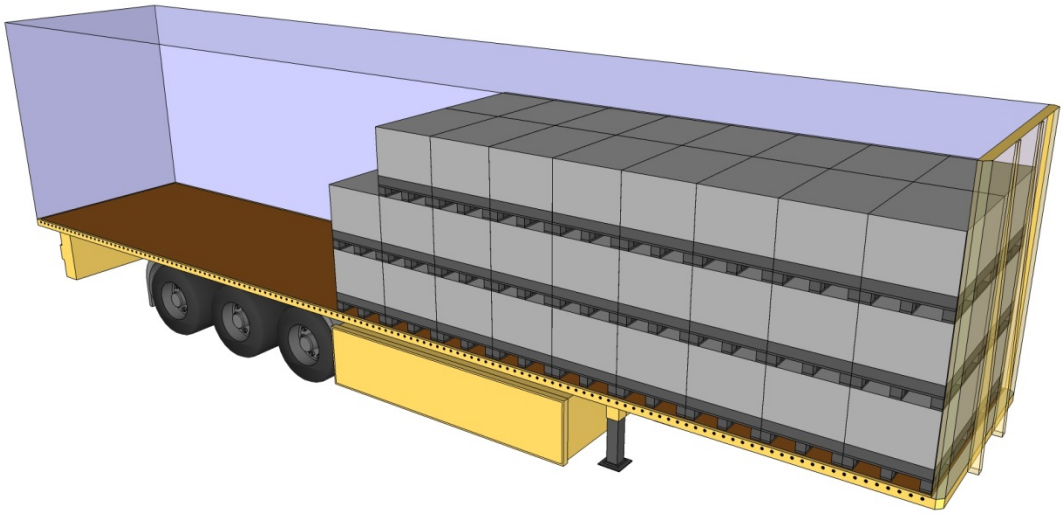

5. Estimated allowable acceleration

Forward: Blocked against headboard

Rearward: 0.20 g

Sideways: 0.20 g (blocked against XL sides)

Verona no. 28

1. Cargo transport unit

Type:	Trailer, curtainsider, XL
Floor:	Plyfa

2. Cargo

Description of cargo:	Plastic boxes with vehicle components	
Number of pieces:	47	*pcs*
Total weight:	6.3	*ton*

3. Securing

Friction factor:	0.2	
Number of lashings:	1	*spring lashing rearward*
Strength in lashing, LC:	2000	*daN (β = 45˚)*

4. Sketch

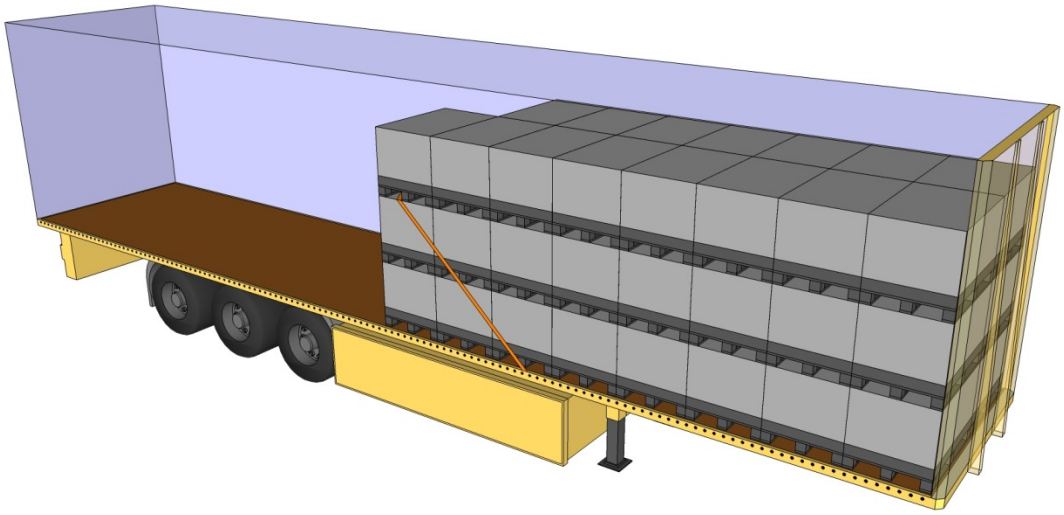

5. Estimated allowable acceleration

Forward:	Blocked against headboard
Rearward:	0.67 g
Sideways:	0.67 g (blocked against XL sides)

Verona no. 29

1. Cargo transport unit

Type: Trailer, cover/stake, non-XL

Floor: Plyfa

2. Cargo

Description of cargo: Steel rectangular bunts

Number of pieces: 23 *pcs*

Total weight: 27.6 *ton*

3. Securing

Friction factor: 0.3

Number of lashings: 8 *top-over lashings*

Pre-tension in lashings: 450 *daN*

The bottom layer of the steel bunts is blocked against side stanchions.

4. Sketch

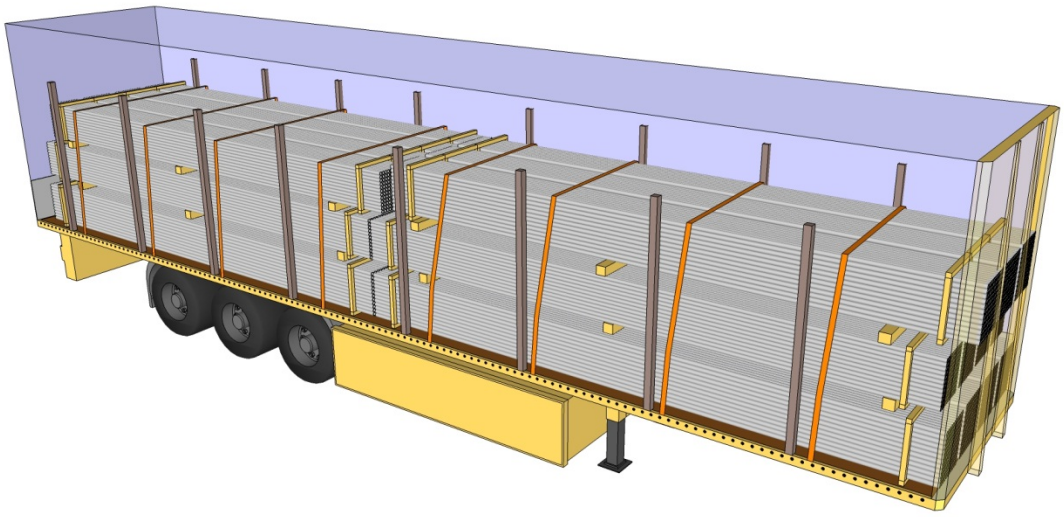

5. Estimated allowable acceleration

Forward: Blocked against headboard

Rearward: 0.43 g

Sideways: 0.48 g (65%), blocked against stanchions (35%)

Verona no. 30

1. Cargo transport unit

Type:	Swap body 20 ft., cover/stake, non-XL
Floor:	Plyfa

2. Cargo

Description of cargo:	Steel coils in cradle	
Number of pieces:	3	*pcs*
Total weight:	24.8	*ton*

3. Securing

Friction factor:	0.6	*rubber between coil and cradle*
Number of lashings:	3	*top-over lashings (1 per coil)*
	6	*loop-spring lashings*
Pre-tension in lashings:	2000	*daN*

4. Sketch

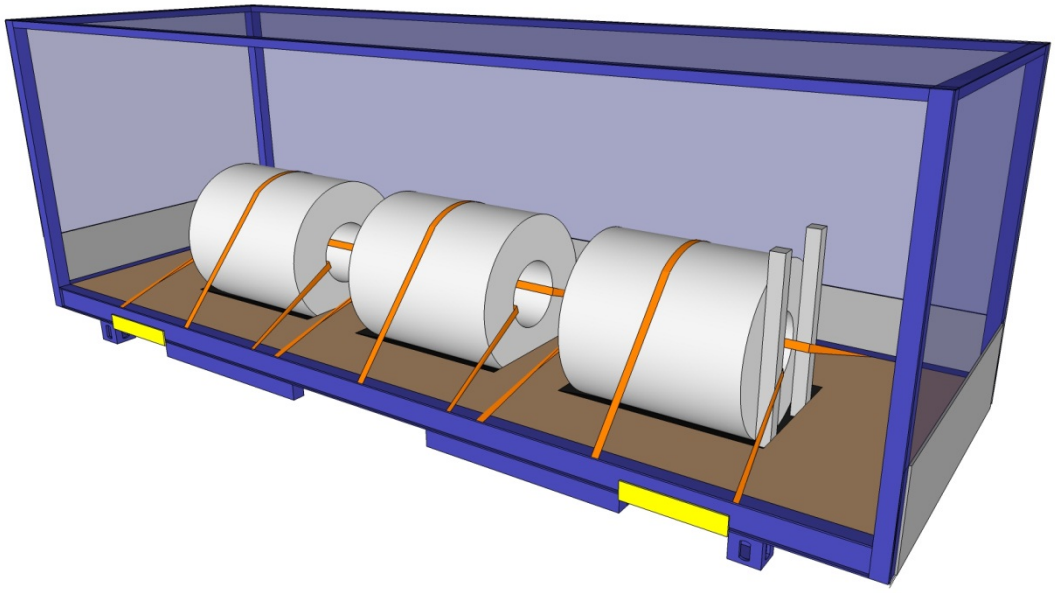

5. Estimated allowable acceleration

Forward:	Blocked against stanchions/cradles
Rearward:	0.64 g
Sideways:	0.87 g

Antwerp no. 1

1. Cargo transport unit

Type: Swap body 45 ft., curtainsider,

Floor: Plyfa

2. Cargo

Description of cargo: Big bags on pallet

Number of pieces: 21 *pcs*

Total weight: 26.3 *ton*

3. Securing

Friction factor: 0.4

Number of lashings: 11 *top-over lashings (1 per section)*

Pre-tension in lashings: 50 *daN*

4. Sketch

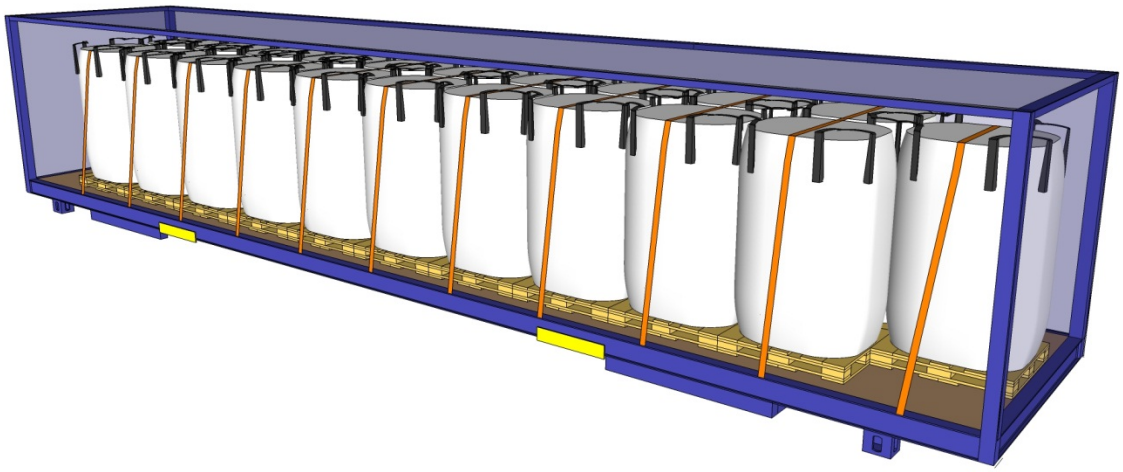

5. Estimated allowable acceleration

Forward: Blocked against headboard

Rearward: 0.42 g

Sideways: 0.41 g

Antwerp no. 2

1. Cargo transport unit

Type: Swap body 45 ft., curtainsider,

Floor: Plyfa

2. Cargo

Description of cargo: Bags on pallet

Number of pieces: 21 *pcs*

Total weight: 26.3 *ton*

3. Securing

Friction factor: 0.4

Number of lashings: 9 *top-over lashings (1 per section)*

Pre-tension in lashings: *daN*

4. Sketch

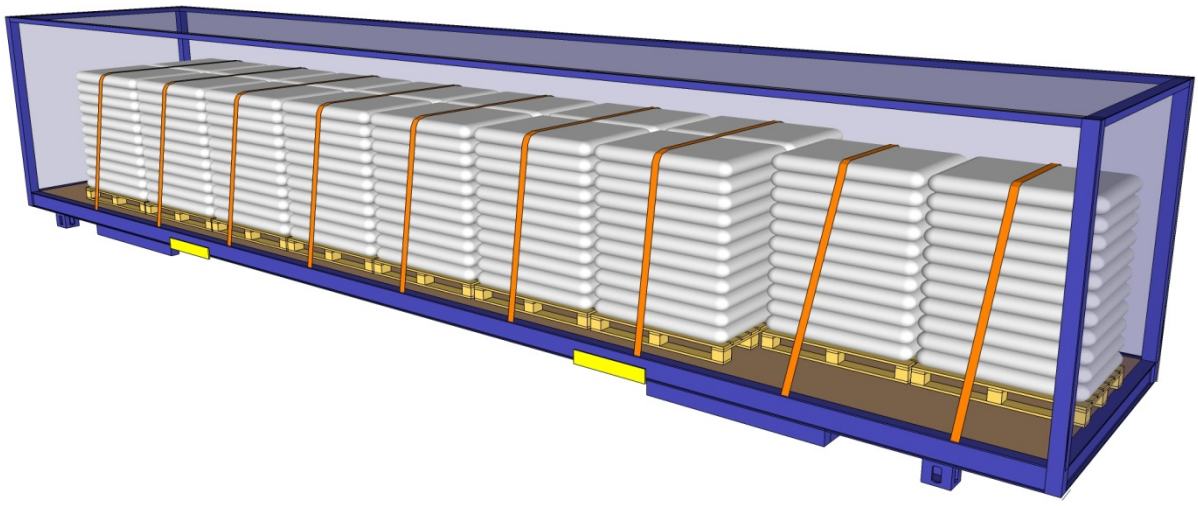

5. Estimated allowable acceleration

Forward: Blocked against headboard

Rearward: 0.41 g

Sideways: 0.41 g

Antwerp no. 3

1. Cargo transport unit

Type: Swap body 45 ft., curtainsider,

Floor: Plyfa

2. Cargo

Description of cargo: Pallet cargo

Number of pieces: 52 *pcs*

Total weight: 28.4 *ton*

3. Securing

Friction factor: 0.3 / 0.45

Number of lashings: 1 *spring lashing rearward in upper layer*

Pre-tension in lashings: - *daN*

The lashing was stripped and is not included in the calculations

4. Sketch

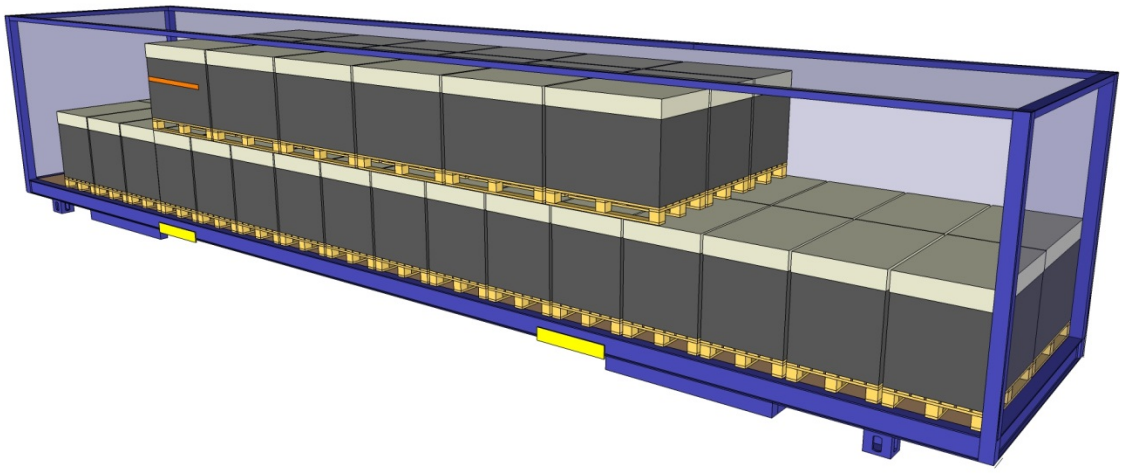

5. Estimated allowable acceleration

Forward: Blocked against headboard (65%), 0.3 g (35%)

Rearward: 0.45 g (65%), 0.3 g (35%)

Sideways: 0.45 g (65%), 0.3 g (35%) (100% blocked against XL sides)

Antwerp no. 4

1. Cargo transport unit

Type: Container 20 ft. curtainsider

Floor: Plyfa

2. Cargo

Description of cargo: Laying steel coils (plastic covered) on wooden beams

Number of pieces: 7 *pcs*

Total weight: 21 *ton*

3. Securing

Friction factor: 0.3

Number of lashings: 5 *top-over lashings*

Pre-tension in lashings: 150 *daN*

4. Sketch

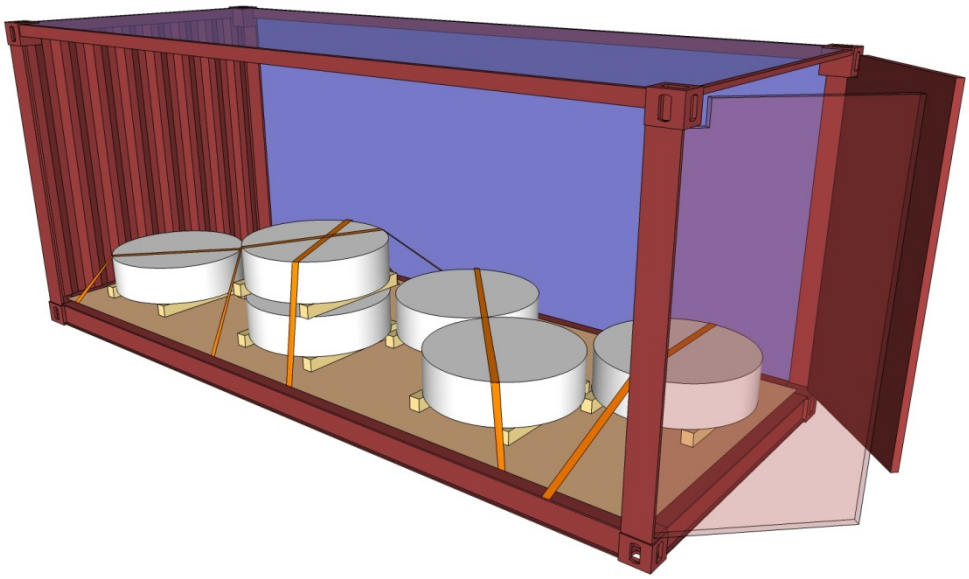

5. Estimated allowable acceleration

Forward: Blocked against end wall

Rearward: Blocked against end wall

Sideways: 0.31 g

Antwerp no. 5

1. Cargo transport unit

Type: Swap body 45 ft. curtainsider

Floor: Plyfa

2. Cargo

Description of cargo: Pallets, pasta

Number of pieces: - *Pcs*

Total weight: 11 *ton*

3. Securing

Friction factor: 0.45 / 0.3

Number of lashings: - *top-over lashings*

Pre-tension in lashings: - *daN*

4. Sketch

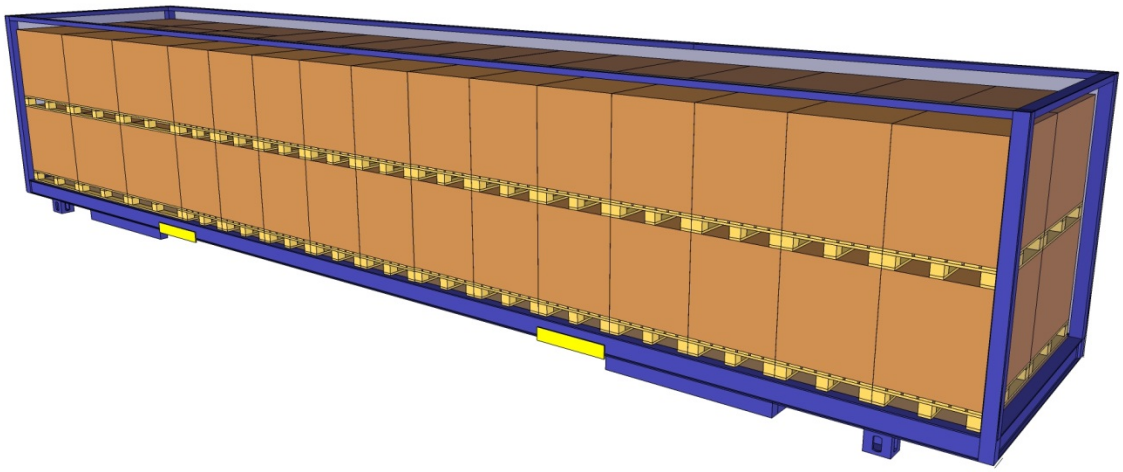

5. Estimated allowable acceleration

Forward: Blocked against end wall

Rearward: Blocked against end wall

Sideways: 0.45 g (50%), 0.3 g (50%)

Antwerp no. 6

1. Cargo transport unit

Type: Swap body 45 ft. curtainsider

Floor: Plyfa

2. Cargo

Description of cargo: Steel pipes

Number of pieces: 38 *pcs*

Total weight: 25 *ton*

3. Securing

Friction factor: 0.45

Number of lashings: 6 *top-over lashings*

Pre-tension in lashings: 400 *daN*

The steel pipes are blocked against side stanchions

4. Sketch

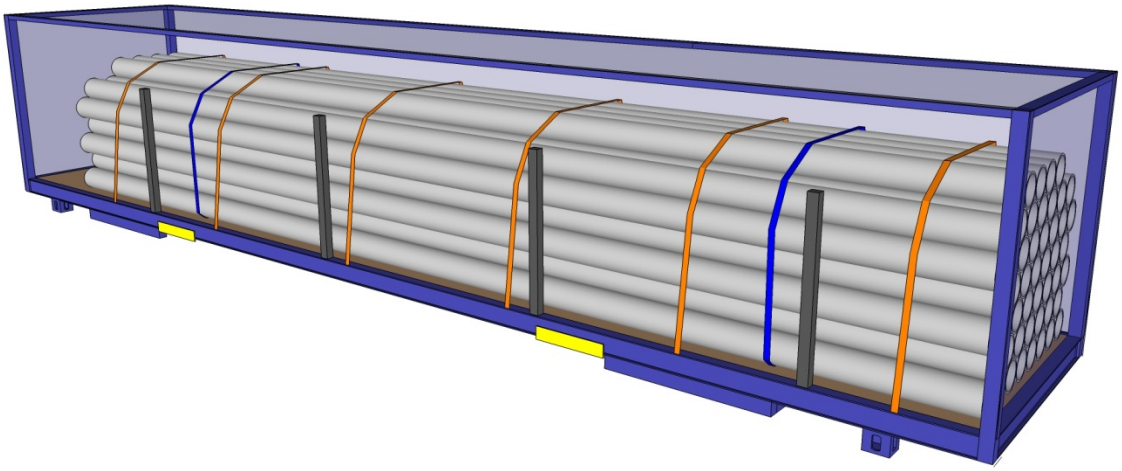

5. Estimated allowable acceleration

Forward: Blocked against end wall

Rearward: 0.53 g

Sideways: Blocked against side stanchions

Antwerp no. 7

1. Cargo transport unit

Type:	Swap body 45 ft. curtainsider
Floor:	Plyfa

2. Cargo

Description of cargo:	Steel coils, laying in cradle	
Number of pieces:	5	*pcs*
Total weight:	16.2	*ton (3.1 + 2.0 + 5.5 + 3.0 + 2.6)*

3. Securing

Friction factor:	0.35	
Number of lashings:	5	*top-over lashings (1 per coil)*
Pre-tension in lashings:	150 - 540	*daN*

4. Sketch

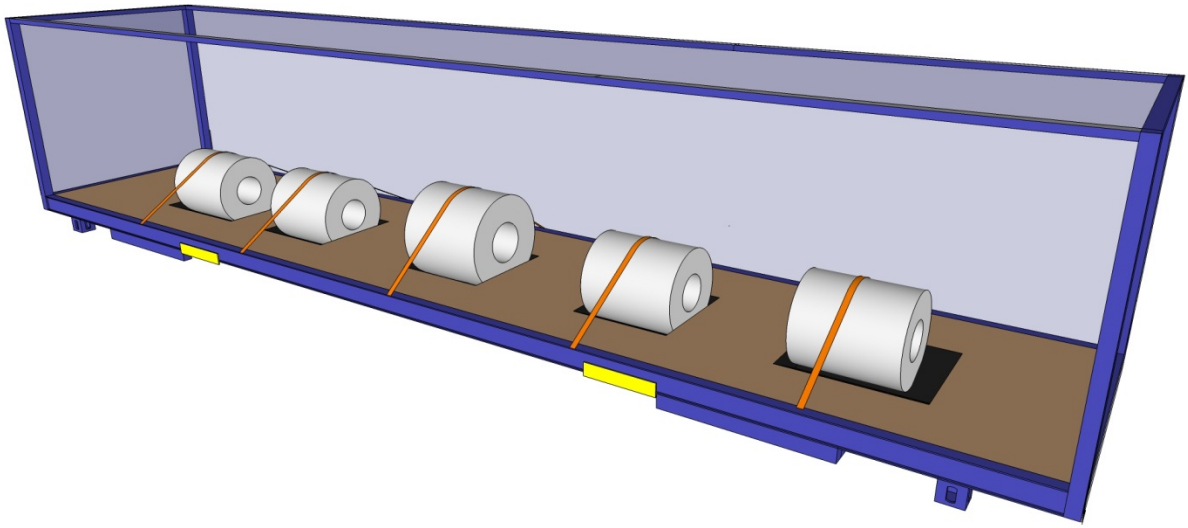

5. Estimated allowable acceleration

Forward:	Blocked in cradle
Rearward:	Blocked in cradle (65%), 0.39 g (35%)
Sideways:	0.64 g

Antwerp no. 8

1. Cargo transport unit

Type: Swap body 45 ft. curtainsider

Floor: Plyfa

2. Cargo

Description of cargo: Pallet cargo, wine

Number of pieces: 39 *pcs*

Total weight: 25 *ton*

3. Securing

Friction factor: 0.45

Number of lashings: - *top-over lashings*

Pre-tension in lashings: - *daN*

4. Sketch

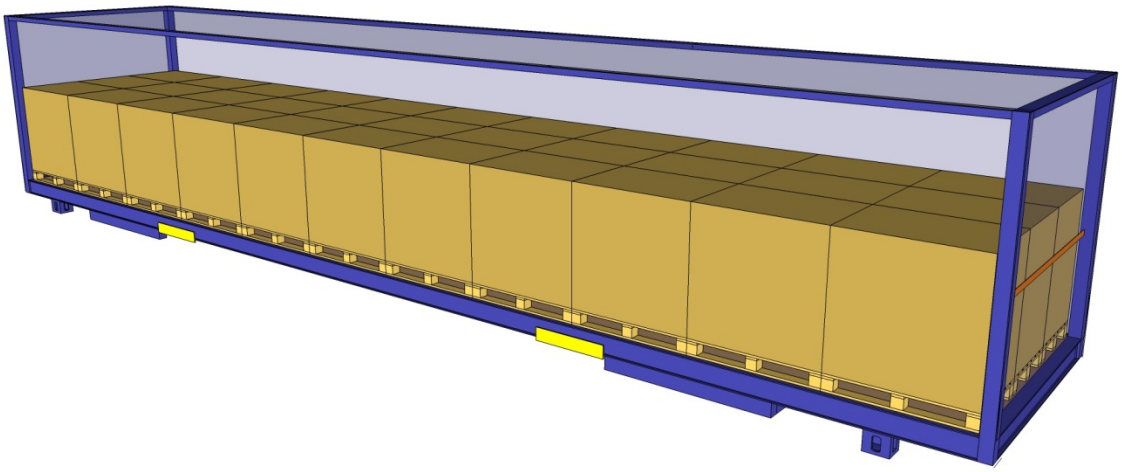

5. Estimated allowable acceleration

Forward: Blocked against end wall

Rearward: 0.45 g

Sideways: 0.45 g

Antwerp no. 9

1. Cargo transport unit

Type:	Swap body 45 ft. curtainsider
Floor:	Plyfa

2. Cargo

Description of cargo:	Copper wire on wooden pallets	
Number of pieces:	6	*pcs*
Total weight:	27	*ton*

3. Securing

Friction factor:	0.4	
Number of lashings:	12	*top-over lashings (2 per pallet)*
	1	*spring lashing forward*
Pre-tension in lashings:	200	*daN*

4. Sketch

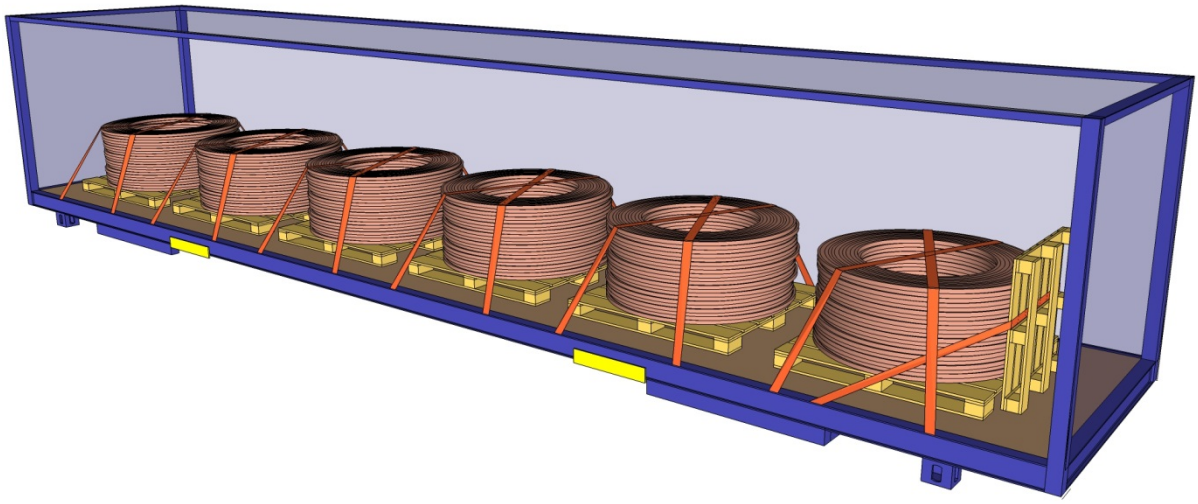

5. Estimated allowable acceleration

Forward:	0.47 g
Rearward:	0.45 g
Sideways:	0.45 g

Antwerp no. 10

1. Cargo transport unit

Type: Swap body 40 ft. curtainsider

Floor: Plyfa

2. Cargo

Description of cargo: Oktabin on pallet

Number of pieces: 20 *pcs*

Total weight: 22 *ton*

3. Securing

Friction factor: 0.45

Number of lashings: 1 *spring lashing rearward*

Strength in lashing, LC: 2000 *daN*

4. Sketch

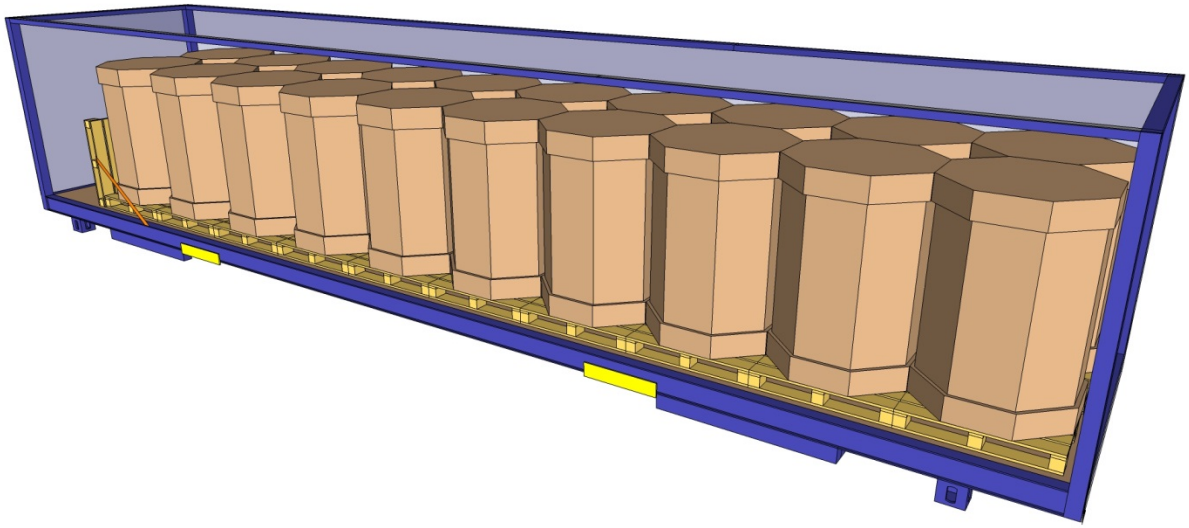

5. Estimated allowable acceleration

Forward: Blocked against end wall

Rearward: 0.51 g

Sideways: 0.45 g

Antwerp no. 11

1. Cargo transport unit

Type:	Swap body 45 ft. curtainsider
Floor:	Plyfa

2. Cargo

Description of cargo:	Steel sheets	
Number of pieces:	4	*Pcs (bunts)*
Total weight:	27.5	*ton*

3. Securing

Friction factor:	0.45	
Number of lashings:	8	*top-over lashings (2 per section)*
Pre-tension in lashings:	50	*daN*

4. Sketch

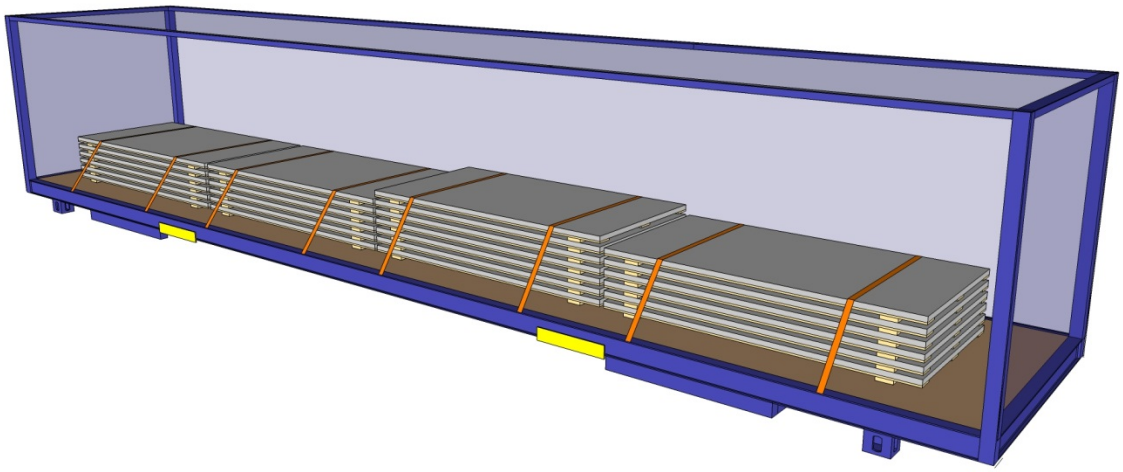

5. Estimated allowable acceleration

Forward:	0.46 g
Rearward:	0.46 g
Sideways:	0.46 g

Antwerp no. 12

1. Cargo transport unit

Type:	Swap body 45 ft. curtainsider, XL
Floor:	Plyfa

2. Cargo

Description of cargo:	Laminate sheets	
Number of pieces:	16	*Pcs*
Total weight:	24.9	*ton*

3. Securing

Friction factor:	0.3	
Number of lashings:	10	*top-over lashings*
Pre-tension in lashings:	200	*daN*

4. Sketch

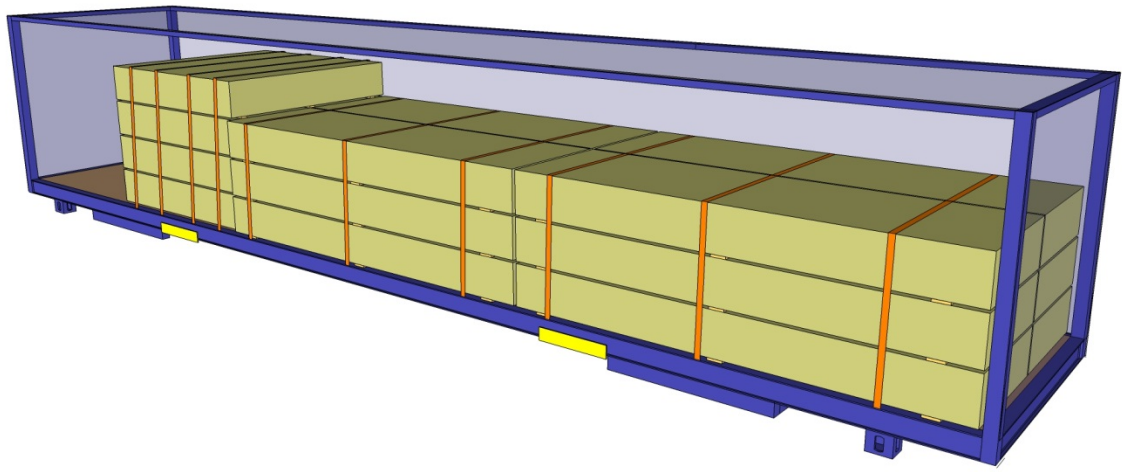

5. Estimated allowable acceleration

Forward:	Blocked against end wall
Rearward:	0.34 g
Sideways:	0.34 g

Antwerp no. 13

1. Cargo transport unit

Type: Container 45 ft.

Floor: Aluminium

2. Cargo

Description of cargo: Pallet cargo, medical

Number of pieces: - *Pcs*

Total weight: 24 *ton*

3. Securing

Friction factor: 0.3

Number of lashings: - *top-over lashings*

Pre-tension in lashings: - *daN*

The cargo is blocked against stanchions in rearward direction

4. Sketch

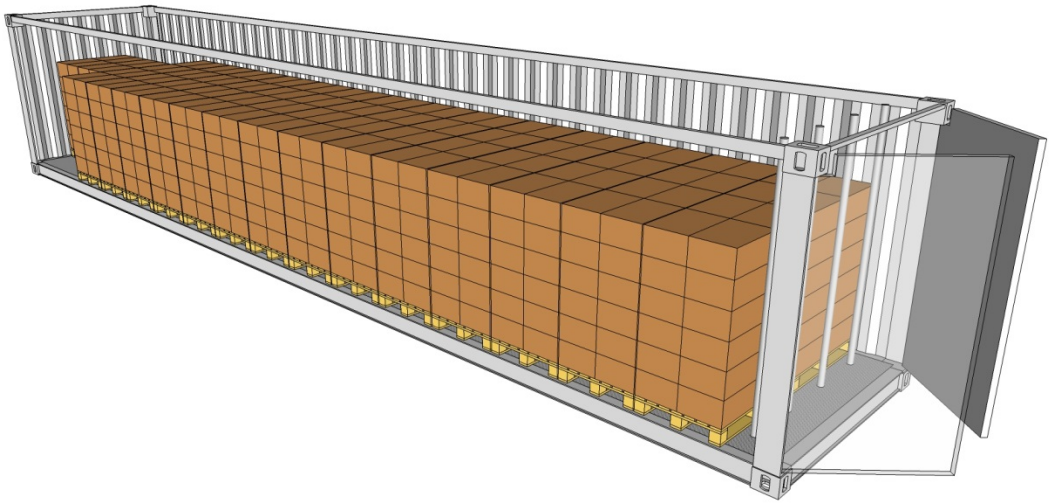

5. Estimated allowable acceleration

Forward: Blocked against end wall

Rearward: Blocked against end wall

Sideways: Blocked against side walls

Antwerp no. 14

1. Cargo transport unit

Type: Container 45 ft.

Floor: Aluminium

2. Cargo

Description of cargo: Pallet cargo, medical

Number of pieces: - *Pcs*

Total weight: 24 *ton*

3. Securing

Friction factor: 0.3

Number of lashings: - *top-over lashings*

Pre-tension in lashings: - *daN*

4. Sketch

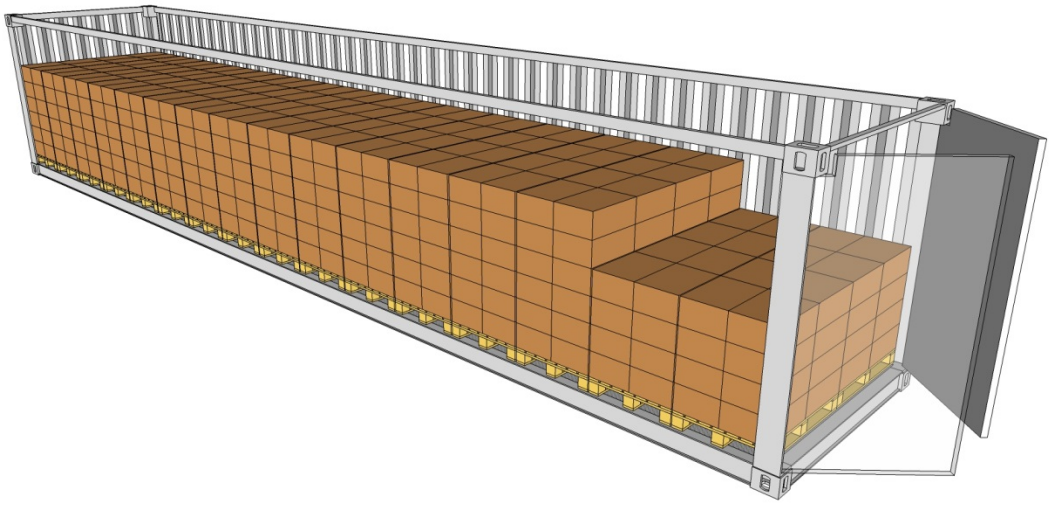

5. Estimated allowable acceleration

Forward: Blocked against end wall

Rearward: Blocked against end wall

Sideways: Blocked against side walls

Antwerp no. 15

1. Cargo transport unit

Type: Container 45 ft.

Floor: Aluminium

2. Cargo

Description of cargo: Pallet cargo, food

Number of pieces: - *Pcs*

Total weight: 15 *ton*

3. Securing

Friction factor: 0.3

Number of lashings: - *top-over lashings*

Pre-tension in lashings: - *daN*

4. Sketch

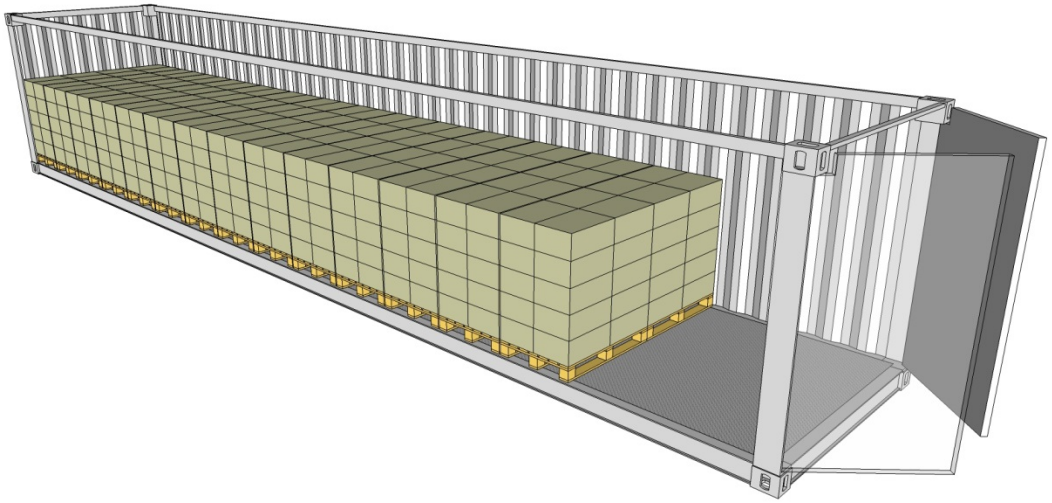

5. Estimated allowable acceleration

Forward: Blocked against end wall

Rearward: 0.30 g

Sideways: Blocked against side walls

Genk no. 1

1. Cargo transport unit

Type:	Trailer, curtainsider, XL
Floor:	Plyfa

2. Cargo

Description of cargo:	Pallet cargo	
Number of pieces:	61	*Pcs*
Total weight:	22	*ton*

3. Securing

Friction factor:	0.45 / 0.3	
Number of lashings:	15	*top-over lashings*
Pre-tension in lashings:	200	*daN*

One top-over lashing per section except for the last section which was secured with a spring lashing in the laths which is not included in the calculations.

4. Sketch

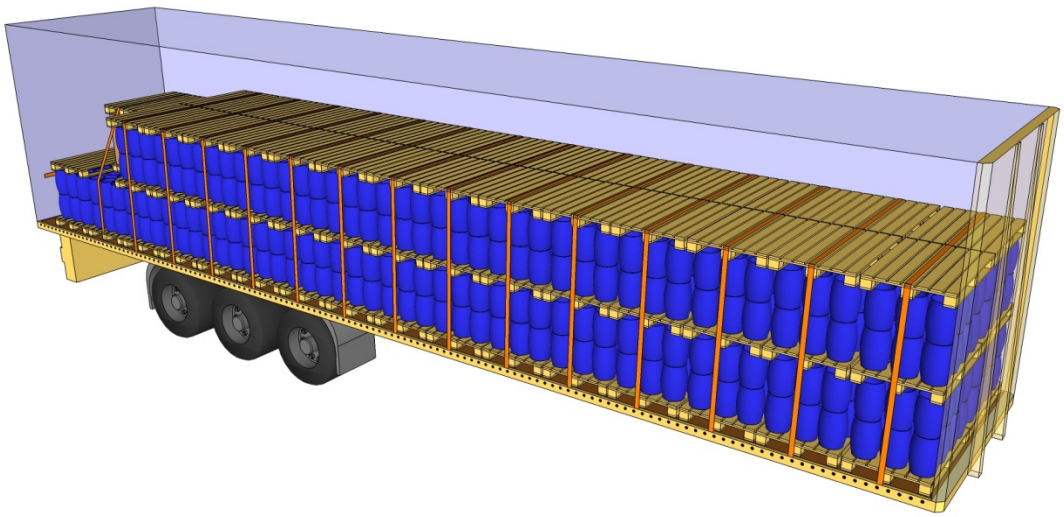

5. Estimated allowable acceleration

Forward:	Blocked against headboard
Rearward:	0.56 g (52%), 0.47 g (48%)
Sideways:	0.56 g (52%, blocked against XL sides), 0.47 g (46.5%, blocked against XL sides), 0.59 g (1.5%)

Genk no. 2

1. Cargo transport unit

Type:	Trailer, curtainsider, XL
Floor:	Plyfa

2. Cargo

Description of cargo:	Pulp, standing reels	
Number of pieces:	5	*Pcs*
Total weight:	14.9	*ton*

3. Securing

Friction factor:	0.5	
Number of lashings:	2	*top-over lashings*
Pre-tension in lashings:	0	*daN*

The top-over lashings were slack and are not included in the calculations

4. Sketch

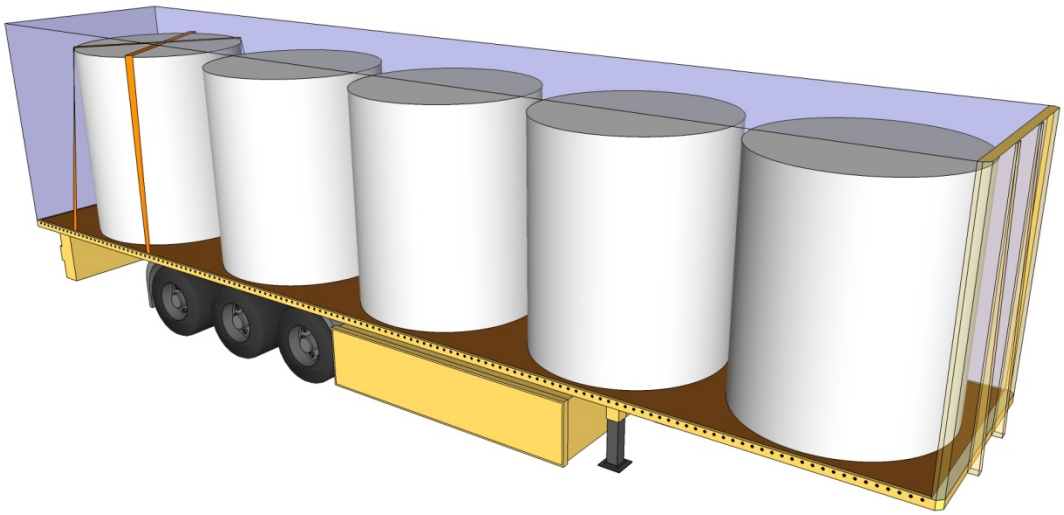

5. Estimated allowable acceleration

Forward:	Blocked against headboard
Rearward:	0.5 g
Sideways:	0.5 g

Genk no. 3

1. Cargo transport unit

Type:	Trailer, curtainsider, XL
Floor:	Plyfa

2. Cargo

Description of cargo:	Pallet cargo, roof tiles	
Number of pieces:	-	*Pcs*
Total weight:	22	*ton*

3. Securing

Friction factor:	0.45 / 0.3	
Number of lashings:	9	*top-over lashings*
Pre-tension in lashings:	75	*daN*

4. Sketch

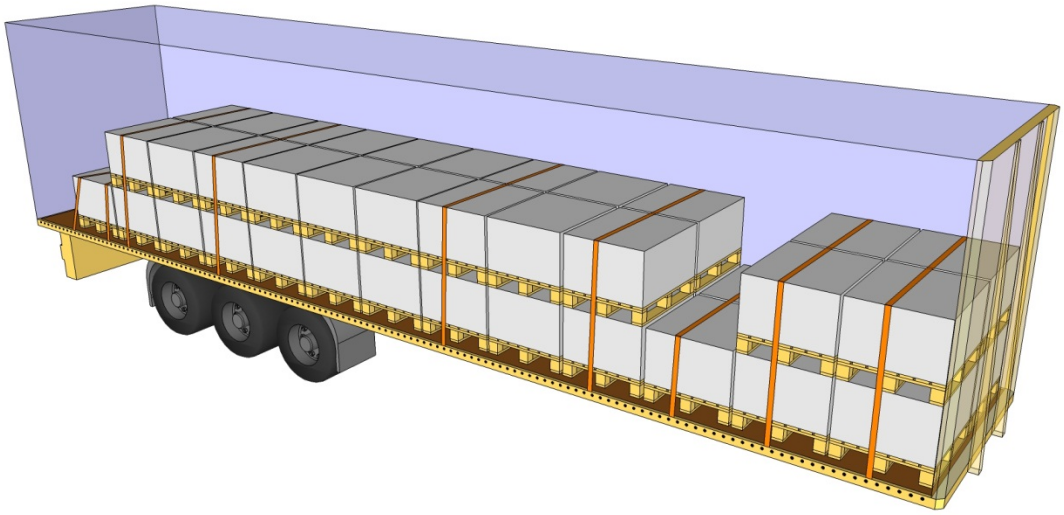

5. Estimated allowable acceleration

Forward:	Blocked against headboard (63%), 0.32 g (37%)
Rearward:	0.48 g (54%), 0.33 g (46%)
Sideways:	0.48 g (25%), 0.34 g (25%), 0.45 g (21%), 0.30 g (21%), 0.51 g (8%)

Genk no. 4

1. Cargo transport unit

Type:	Trailer, curtainsider, XL
Floor:	Plyfa

2. Cargo

Description of cargo:	Paper reels, standing	
Number of pieces:	9	*Pcs*
Total weight:	18	*ton*

3. Securing

Friction factor:	0.5	
Number of lashings:	9	*top-over lashings (1 per reel)*
Pre-tension in lashings:	450	*daN*

4. Sketch

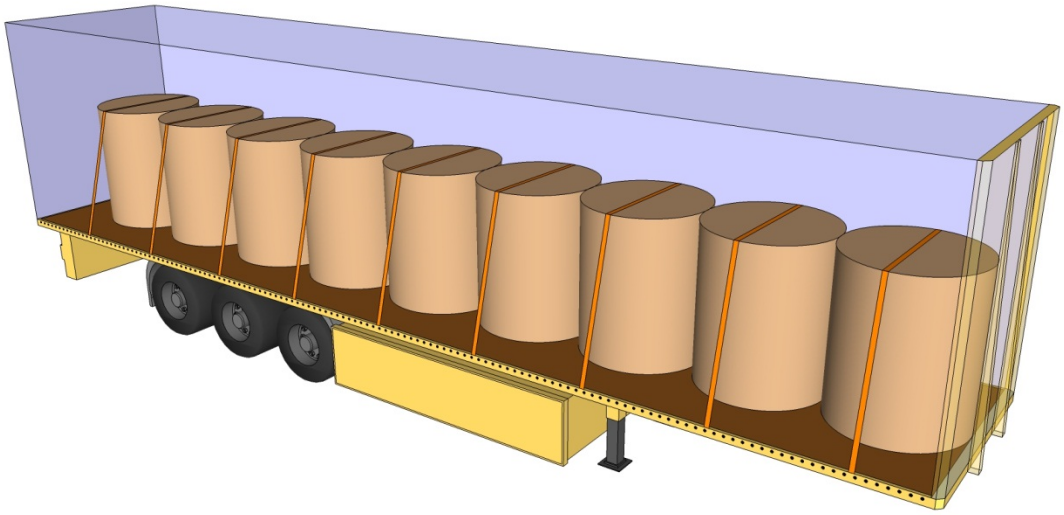

5. Estimated allowable acceleration

Forward:	Blocked against headboard
Rearward:	0.70 g
Sideways:	0.70 g

Genk no. 5

1. Cargo transport unit

Type:	Trailer, curtainsider, XL
Floor:	Plyfa

2. Cargo

Description of cargo:	Pallets, bags	
Number of pieces:	24	*Pcs*
Total weight:	24	*ton*

3. Securing

Friction factor:	0.45	
Number of lashings:	13	*top-over lashings (1 per section)*
Pre-tension in lashings:	100	*daN*

4. Sketch

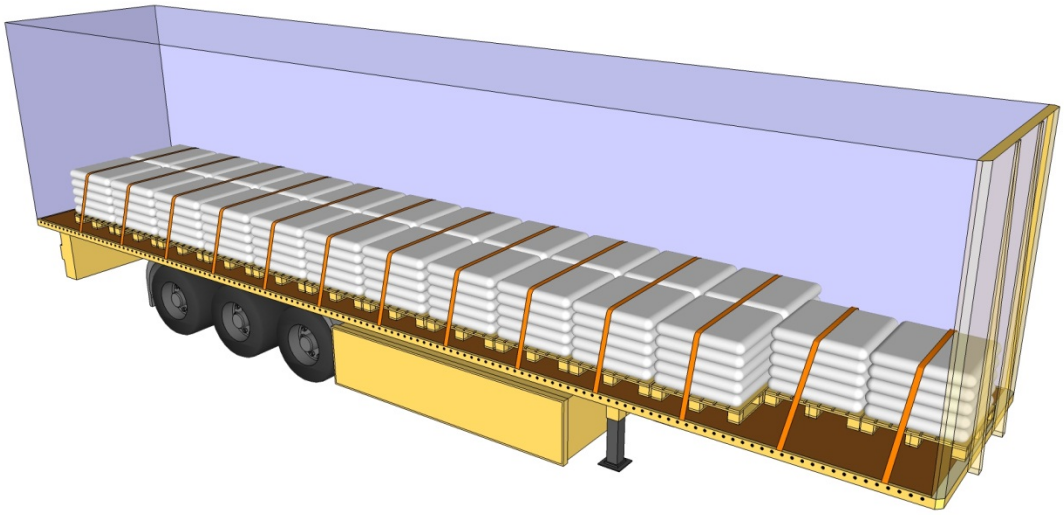

5. Estimated allowable acceleration

Forward:	Blocked against headboard
Rearward:	0.49 g
Sideways:	0.49 g

Genk no. 6

1. Cargo transport unit

Type:	Trailer, curtainsider, XL
Floor:	Plyfa

2. Cargo

Description of cargo:	Batteries on pallet	
Number of pieces:	26	*Pcs*
Total weight:	25	*ton*

3. Securing

Friction factor:	0.45	
Number of lashings:	10	*top-over lashings (1 per section)*
Pre-tension in lashings:	200	*daN*

4. Sketch

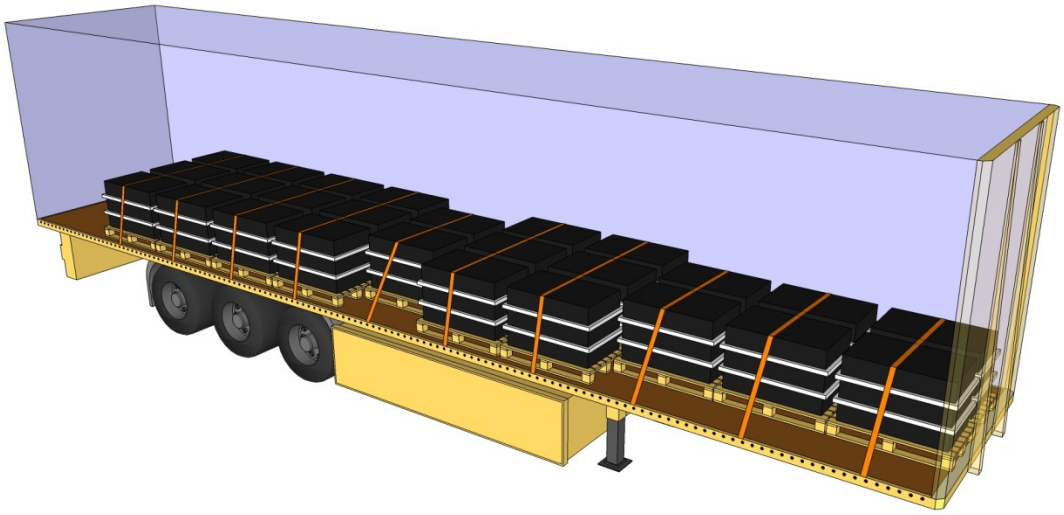

5. Estimated allowable acceleration

Forward:	Blocked against headboard
Rearward:	0.51 g
Sideways:	0.50 g (69 %), 0.52 g (31%)

Genk no. 7

1. Cargo transport unit

Type:	Swap-body 45 ft. cover/stake, non-XL
Floor:	Plyfa

2. Cargo

Description of cargo:	Timber, oiled	
Number of pieces:	-	*Pcs*
Total weight:	≈ 25	*ton*

3. Securing

Friction factor:	0.45	
Number of lashings:	8	*top-over lashings (1 per section)*
Pre-tension in lashings:	350	*daN*

4. Sketch

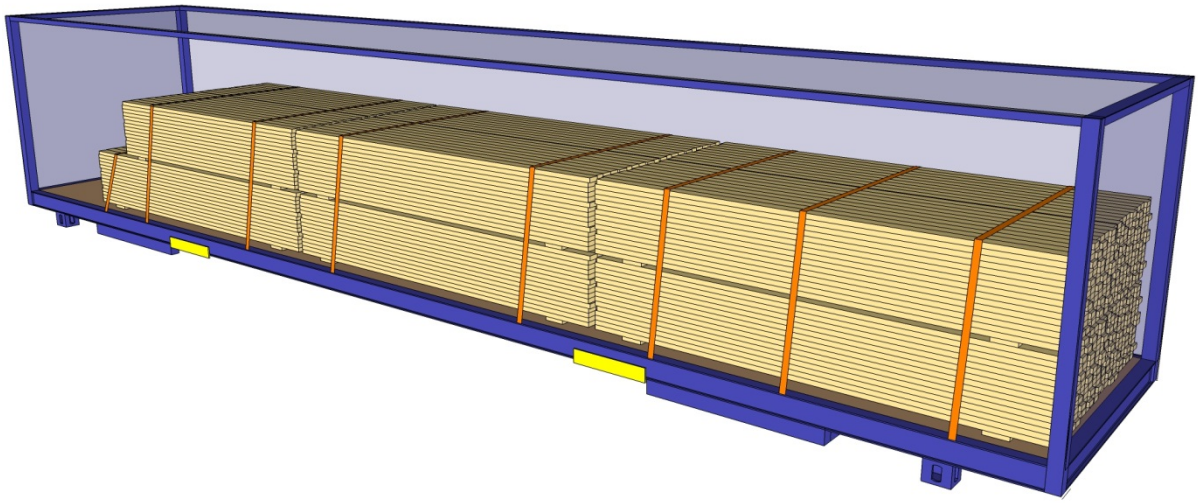

5. Estimated allowable acceleration

Forward:	Blocked against headboard
Rearward:	0.54 g
Sideways:	0.54 g

Genk no. 8

1. Cargo transport unit

Type:	Trailer. curtainsider, XL
Floor:	Plyfa

2. Cargo

Description of cargo:	Animal skins	
Number of pieces:	20	*Pcs*
Total weight:	25	*ton*

3. Securing

Friction factor:	0.45	
Number of lashings:	10	*top-over lashings (1 per section)*
Pre-tension in lashings:	300	*daN*

4. Sketch

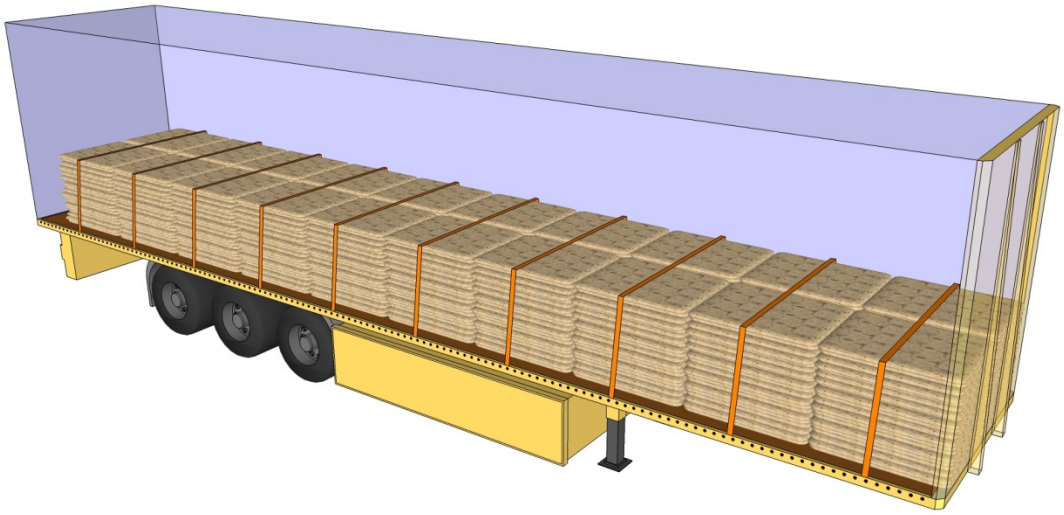

5. Estimated allowable acceleration

Forward:	Blocked against headboard
Rearward:	0.55 g
Sideways:	0.55 g

Novara no. 1

1. Cargo transport unit

Type: Swap body 45 ft., box type, XL

Floor: Plyfa(varnished)

2. Cargo

Description of cargo: Pallet cargo

Number of pieces: 33 *pcs*

Total weight: 22.1 *ton*

3. Securing

Friction factor: 0.3 *(estimated friction factor for varnished floor)*

Number of lashings: - *top-over lashings*

Pre-tension in lashings: - *daN*

4. Sketch

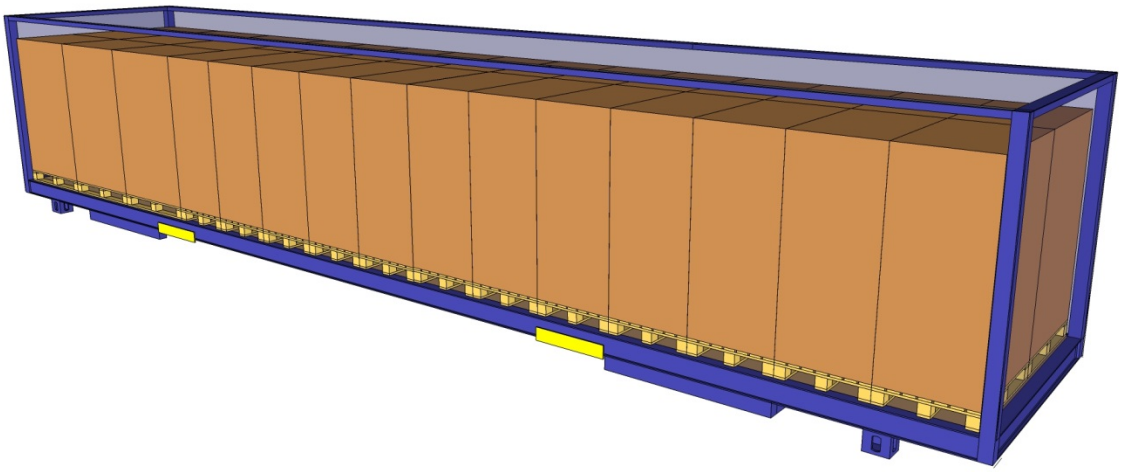

5. Estimated allowable acceleration

Forward: Blocked against end wall

Rearward: 0.30 g

Sideways: Blocked against strong side walls

Novara no. 2

1. Cargo transport unit

Type: Swap body 45 ft., box type, XL

Floor: Plyfa(varnished)

2. Cargo

Description of cargo: Pallet cargo

Number of pieces: 33 *pcs*

Total weight: 22.1 *ton*

3. Securing

Friction factor: 0.3 *(estimated friction factor for varnished floor)*

Number of lashings: - *top-over lashings*

Pre-tension in lashings: - *daN*

4. Sketch

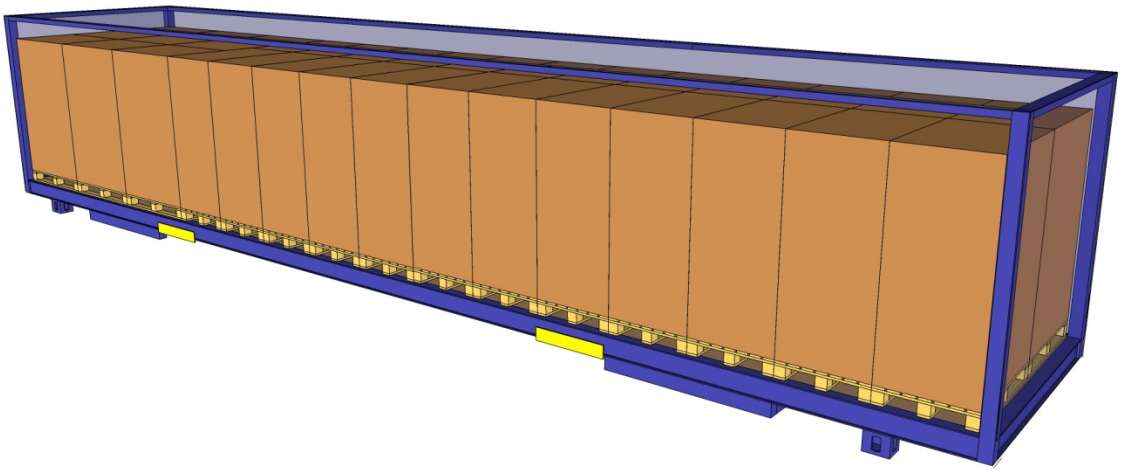

5. Estimated allowable acceleration

Forward: Blocked against end wall

Rearward: 0.30 g

Sideways: Blocked against strong side walls

Novara no. 3

1. Cargo transport unit

Type: Trailer, cover stake, non-XL

Floor: Plyfa

2. Cargo

Description of cargo: Crates

Number of pieces: 39 *pcs*

Total weight: 19.5 *ton*

3. Securing

Friction factor: 0.45

Number of lashings: - *top-over lashings*

Pre-tension in lashings: - *daN*

4. Sketch

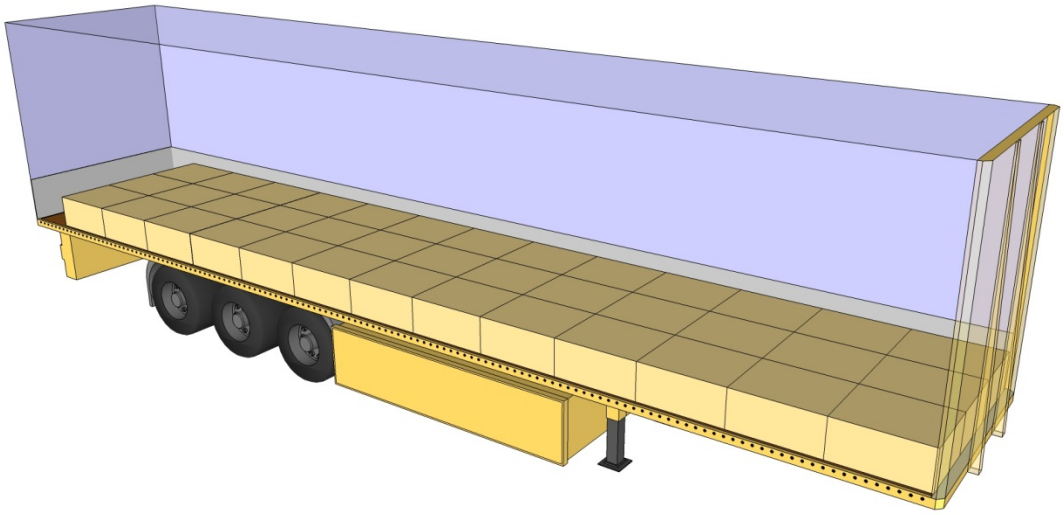

5. Estimated allowable acceleration

Forward: Blocked against headboard

Rearward: 0.45 g

Sideways: 0.45 g

Busto no. 1

1. Cargo transport unit

Type: Trailer, curtainsider, XL

Floor: Plyfa

2. Cargo

Description of cargo: Fork lift trucks

Number of pieces: 6 *pcs*

Total weight: 15 *ton*

3. Securing

Friction factor: 0.6

Number of lashings: 7 *lashings*

Strength in lashings, LC: 2500 *daN*

Totally 8 wedges are placed in front of and behind some of the fork lifts.

4. Sketch

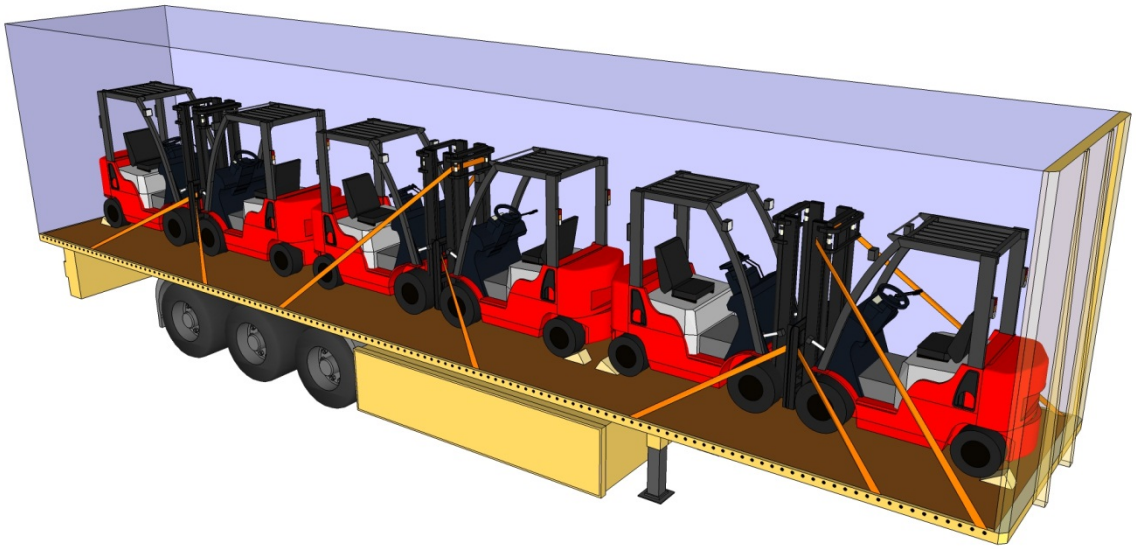

5. Estimated allowable acceleration

Forward: Blocked against headboard

Rearward: 0.84 g

Sideways: 0.68 g

Busto no. 2

1. Cargo transport unit

Type: Swap body 20 ft, cover stake

Floor: Plyfa

2. Cargo

Description of cargo: Machineries, on pallet

Number of pieces: 12 *pcs*

Total weight: 7 *ton*

3. Securing

Friction factor: 0.45

Number of lashings: - *top-over lashings*

Pre-tension in lashings: - *daN*

4. Sketch

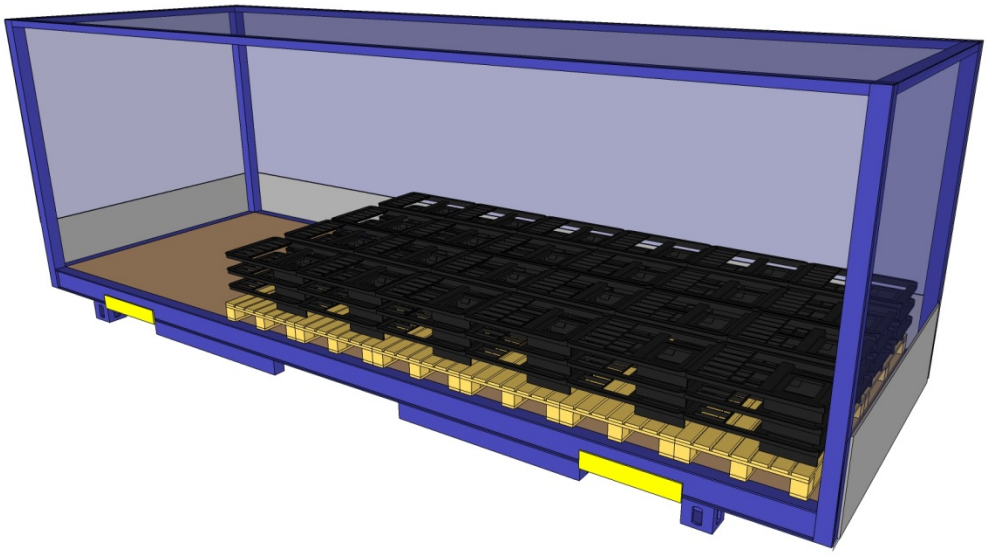

5. Estimated allowable acceleration

Forward: Blocked against end wall

Rearward: 0.45

Sideways: Blocked against sideboards

Busto no. 3

1. Cargo transport unit

Type: Swap body 20 ft, cover stake

Floor: Plyfa

2. Cargo

Description of cargo: Machineries, on pallet

Number of pieces: 14 *pcs*

Total weight: 10 *ton*

3. Securing

Friction factor: 0.45

Number of lashings: - *top-over lashings*

Pre-tension in lashings: - *daN*

4. Sketch

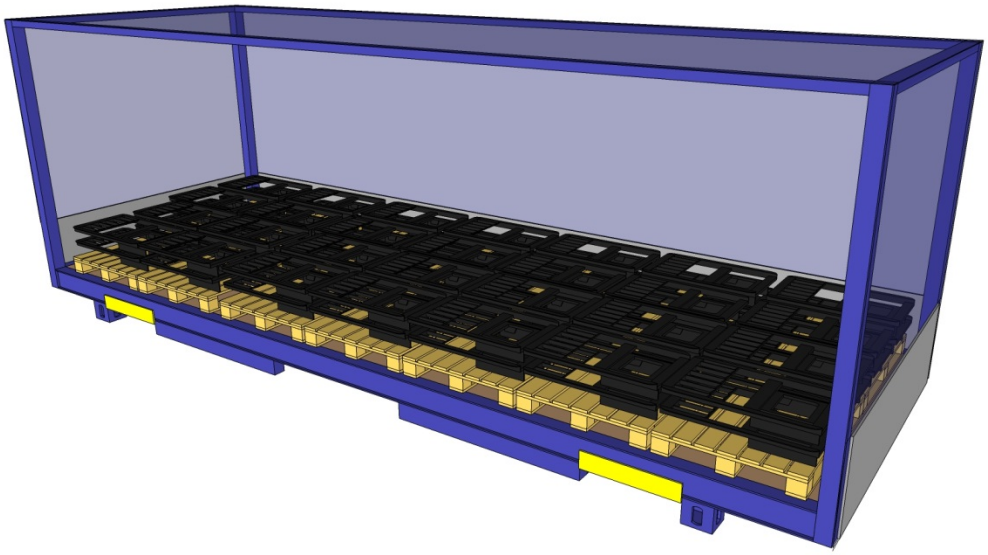

5. Estimated allowable acceleration

Forward: Blocked against end wall

Rearward: 0.45 g

Sideways: Blocked against sideboards

Busto no. 4

1. Cargo transport unit

Type: Swap body 45 ft, curtainsider

Floor: Plyfa

2. Cargo

Description of cargo: Squared profiles in bundles on transverse beams

Number of pieces: 6 *pcs*

Total weight: 27 *ton*

3. Securing

Friction factor: 0.45

Number of lashings: 7 *top-over lashings*

Pre-tension in lashings: 330 *daN*

4. Sketch

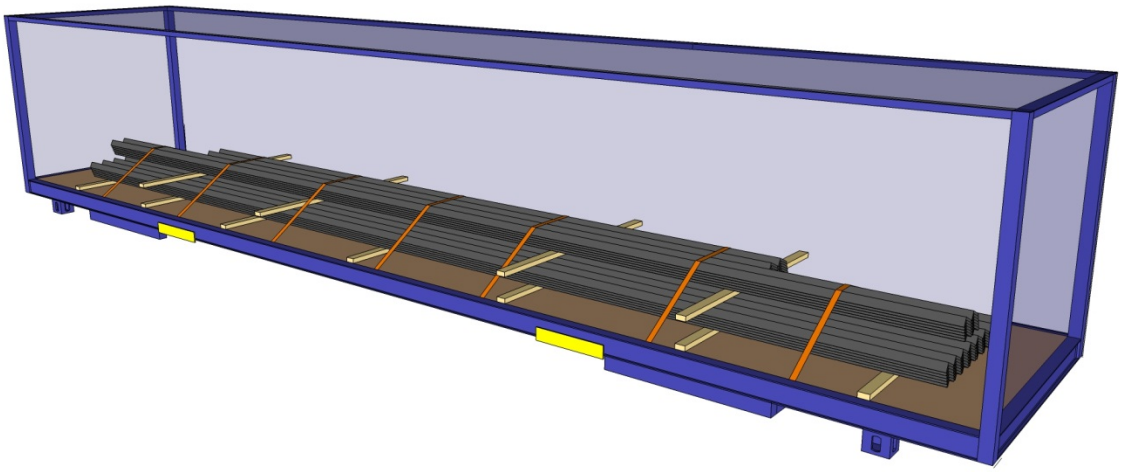

5. Estimated allowable acceleration

Forward: 0.53 g

Rearward: 0.53 g

Sideways: 0.53 g

Busto no. 5

1. Cargo transport unit

Type: Swap body 45 ft, curtainsider

Floor: Plyfa

2. Cargo

Description of cargo: Steel pipes in bunts, in wooden profiles

Number of pieces: - *pcs*

Total weight: 16 *ton*

3. Securing

Friction factor: 0.3

Number of lashings: 6 *top-over lashings*

Pre-tension in lashings: 300 *daN*

4. Sketch

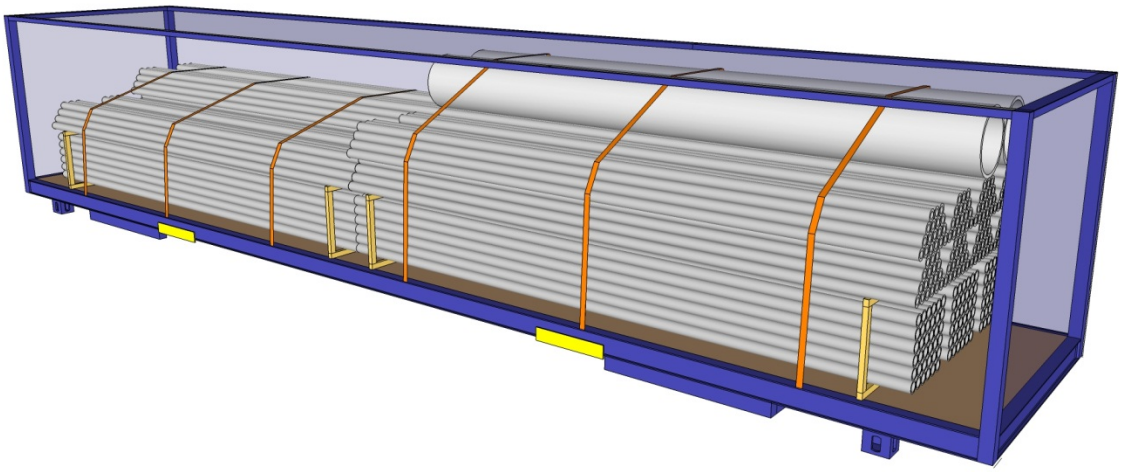

5. Estimated allowable acceleration

Forward: 0.35 g

Rearward: 0.35 g

Sideways: 0.35 g

Busto no. 6

1. Cargo transport unit

Type: Trailer, curtainsider, XL

Floor: Plyfa

2. Cargo

Description of cargo: Water in plastic bins

Number of pieces: 26 *pcs*

Total weight: 15 *ton*

3. Securing

Friction factor: 0.2

Number of lashings: 1 *spring lashing rearwards (β ≈ 80˚)*

Strength in lashings, LC: 2500 *daN*

4. Sketch

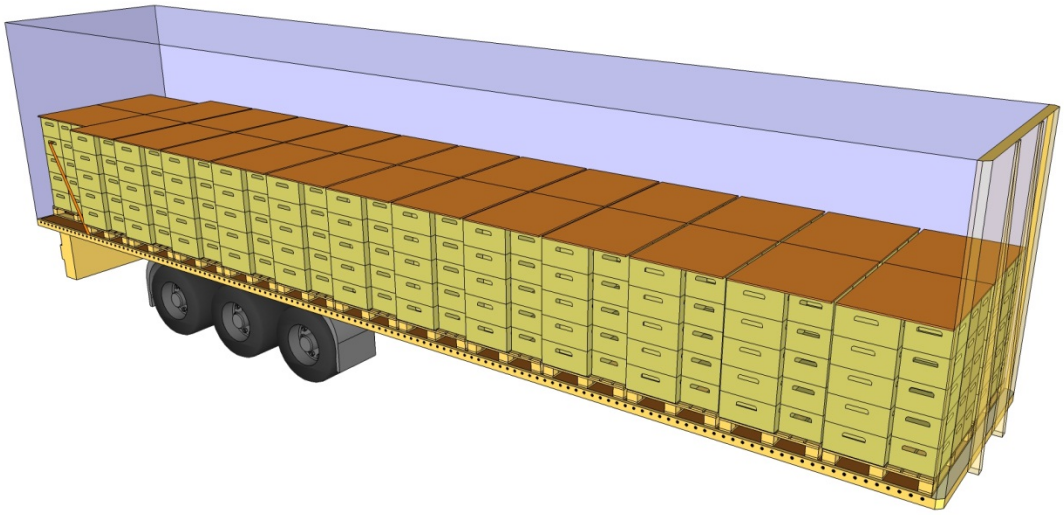

5. Estimated allowable acceleration

Forward: Blocked against headboard

Rearward: 0.26 g

Sideways: 0.26 g (blocked against XL sides ≈50%), 0.20 g (≈50%)

Busto no. 7

1. Cargo transport unit

Type:	Container 30 ft.
Floor:	Plyfa

2. Cargo

Description of cargo:	Marble plates in A-trestles + pallets with laying plates	
Number of pieces:	2+2	*pcs*
Total weight:	27	*ton*

3. Securing

Friction factor:	0.5 / 0.7	
Number of lashings:	10	*top-over lashings*
Pre-tension in lashings:	200	*daN (web lashings)*
Pre-tension in lashings:	1000	*daN (chain lashings)*

4. Sketch

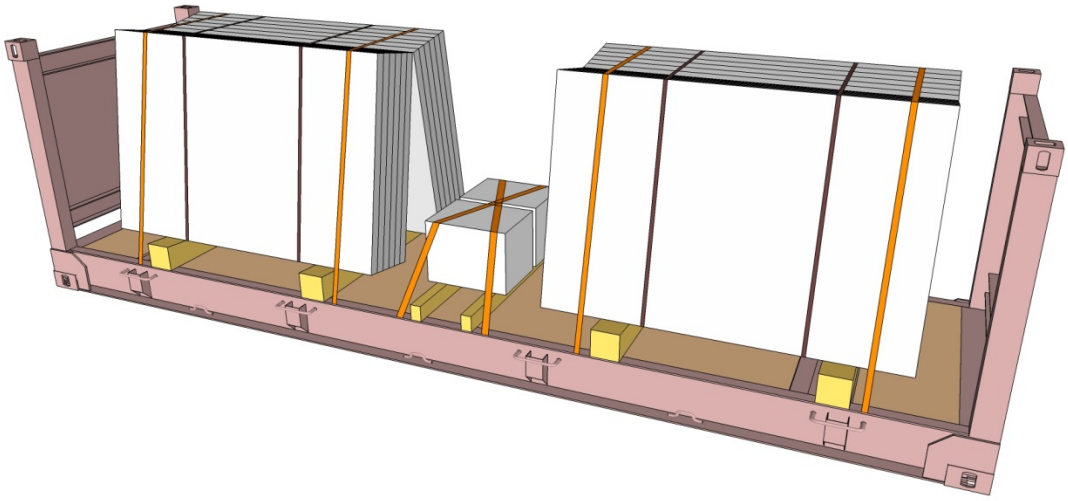

5. Estimated allowable acceleration

Forward:	0.95 g (93%), 0.64 g (7%)
Rearward:	0.95 g (93%), 0.64 g (7%)
Sideways:	1.63 g (93%), 0.64 g (7%)

Busto no. 8

1. Cargo transport unit

Type: Container 30 ft.

Floor: Plyfa

2. Cargo

Description of cargo: Marble plates in A-trestles

Number of pieces: 2 *pcs*

Total weight: 27 *ton*

3. Securing

Friction factor: 0.5 / 0.7

Number of lashings: 8 *top-over lashings*

Pre-tension in lashings: 350 *daN (web lashings)*

Pre-tension in lashings: 1000 *daN (chain lashings)*

4. Sketch

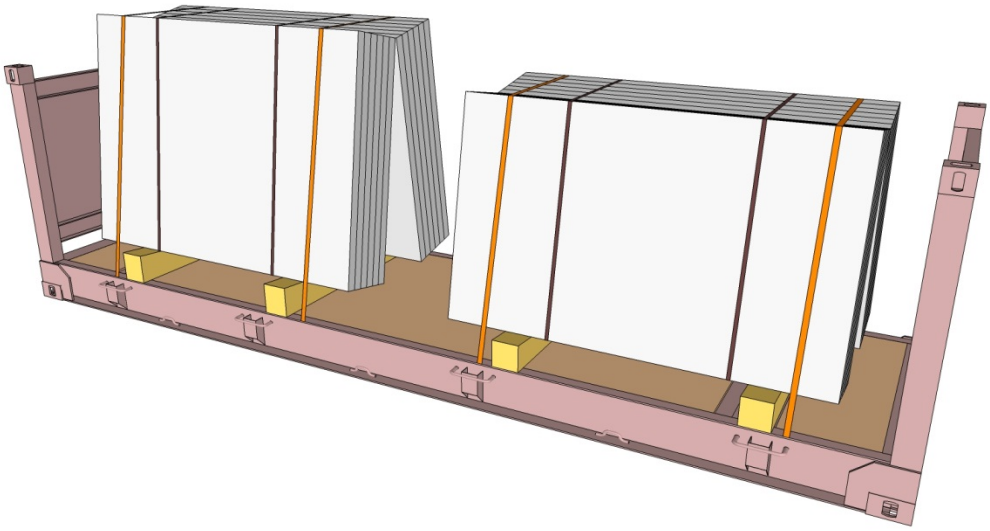

5. Estimated allowable acceleration

Forward: 0.95 g

Rearward: 0.95 g

Sideways: 1.26 g

Busto no. 9

1. Cargo transport unit

Type:	Trailer, curtainsider, XL	
Floor:	Plyfa	

2. Cargo

Description of cargo:	Pallet cargo	
Number of pieces:	54	*pcs*
Total weight:	11.3	*ton*

3. Securing

Friction factor:	0.45	
Number of lashings:	-	*top-over lashings*
Pre-tension in lashings:	-	*daN*

4. Sketch

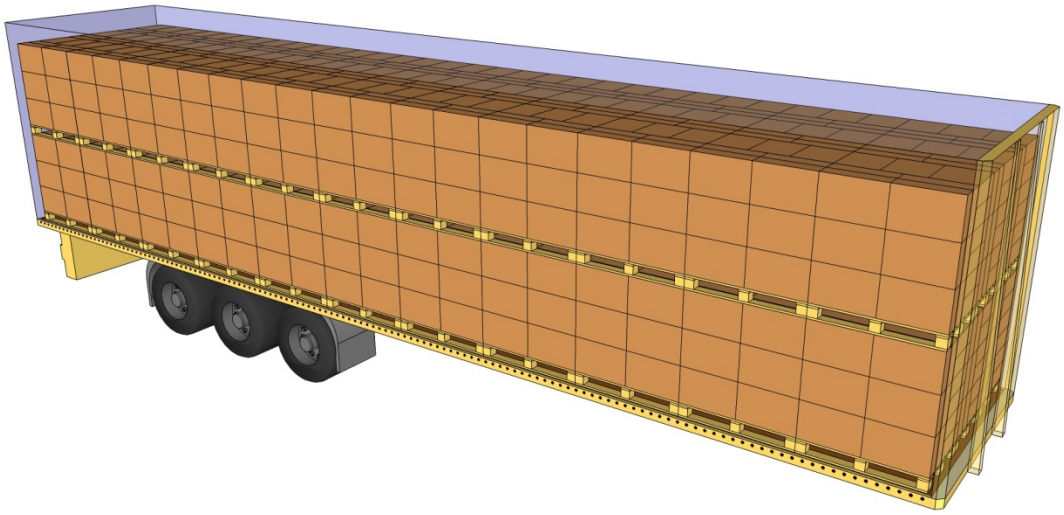

5. Estimated allowable acceleration

Forward:	Blocked against headboard
Rearward:	Blocked against doors
Sideways:	0.45 g (blocked against XL sides)

Busto no. 10

1. Cargo transport unit

Type: Trailer, curtainsider, XL

Floor: Plyfa

2. Cargo

Description of cargo: Water in plastic bins (30×40 cm)

Number of pieces: 26 *pcs*

Total weight: 15 *ton*

3. Securing

Friction factor: 0.2

Number of lashings: 1 *spring lashing rearward (θ ≈ 80˚)*

Strength in lashing, LC: 2500 *daN*

4. Sketch

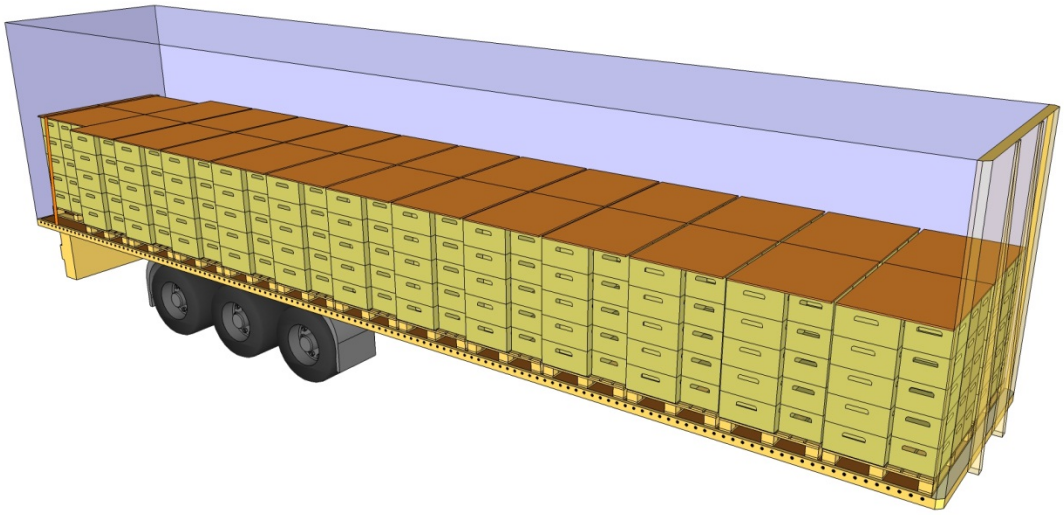

5. Estimated allowable acceleration

Forward: Blocked against headboard

Rearward: 0.26 g

Sideways: 0.26 g (blocked against XL sides ≈50%), 0.20 g (≈50%)

Busto no. 11

1. Cargo transport unit

Type:	Trailer, curtainsider, XL
Floor:	Plyfa

2. Cargo

Description of cargo:	Pallet cargo, water bottles	
Number of pieces:	30	*pcs*
Total weight:	19.7	*ton*

3. Securing

Friction factor:	0.45	
Number of lashings:	-	*top-over lashings*
Pre-tension in lashings:	-	*daN*

4. Sketch

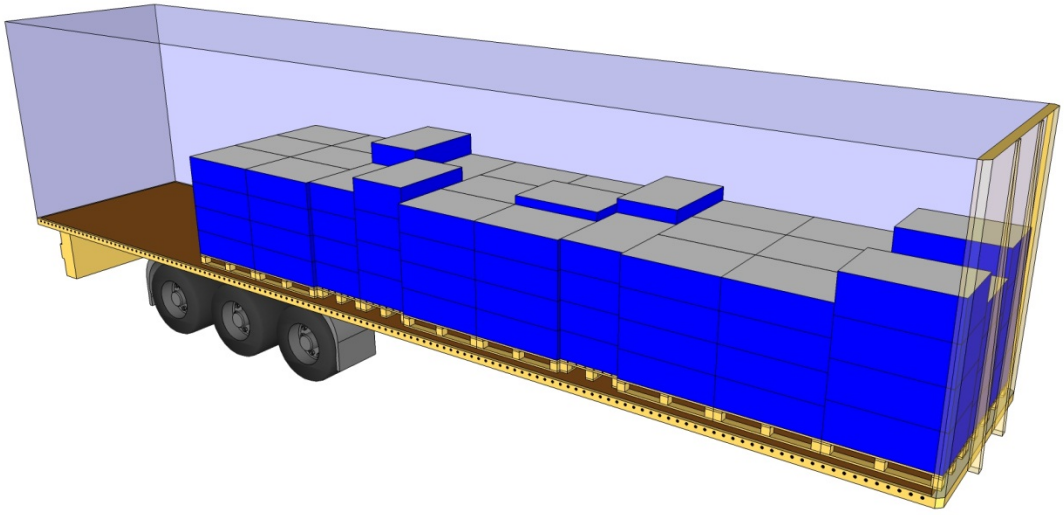

5. Estimated allowable acceleration

Forward:	Blocked against headboard
Rearward:	0.45 g
Sideways:	0.45 g (blocked against XL sides)

Busto no. 12

1. Cargo transport unit

Type: Container 20 ft., for steel coils

Floor: Steel

2. Cargo

Description of cargo: Steel coils, laying

Number of pieces: 2 *pcs*

Total weight: 23.6 *ton*

3. Securing

Friction factor: 0.6 *rubber between coil and cradle*

Number of lashings: 4 *loop-spring lashings*

Strength in lashings, LC: 2000 *daN*

4. Sketch

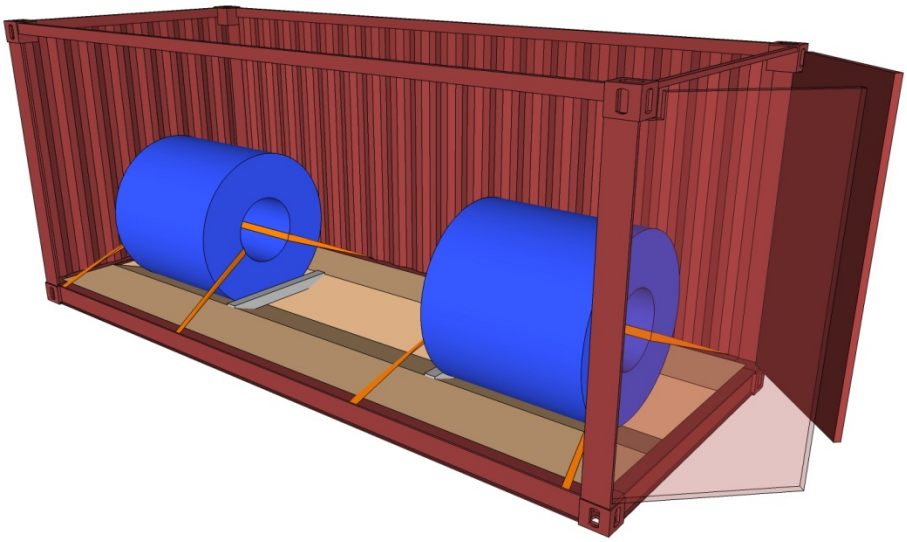

5. Estimated allowable acceleration

Forward: Blocked in cradle (53%), 0.62 g (47%)

Rearward: 0.62 g (53%), blocked in cradle (47%),

Sideways: 0.94 g (53%), 0.98 g (47%)

Busto no. 13

1. Cargo transport unit

Type: Trailer, curtainsider, XL

Floor: Plyfa

2. Cargo

Description of cargo: Water bottles on pallets

Number of pieces: 30 *pcs*

Total weight: 19.7 *ton*

3. Securing

Friction factor: 0.45

Number of lashings: - *top-over lashings*

Pre-tension in lashings: - *daN*

4. Sketch

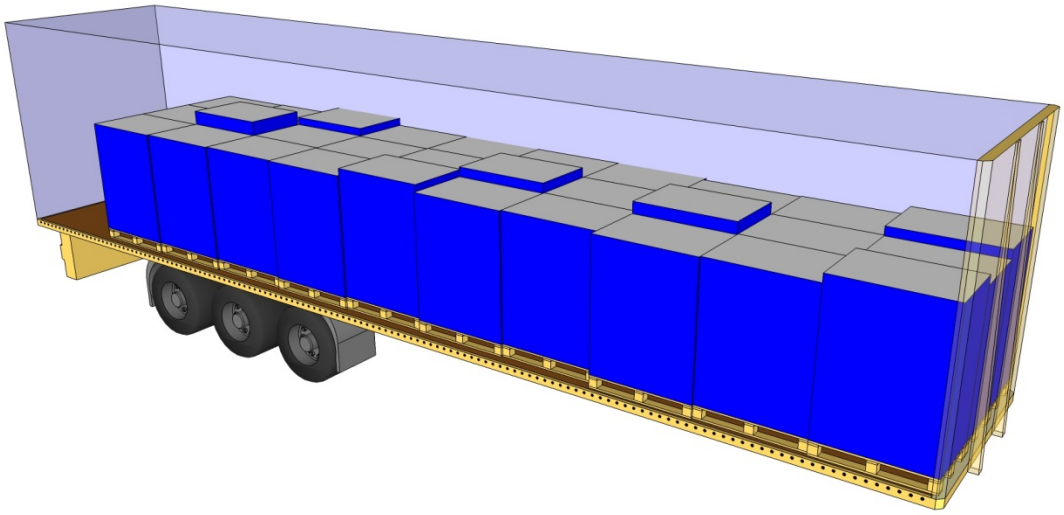

5. Estimated allowable acceleration

Forward: Blocked against headboard

Rearward: 0.20 g

Sideways: 0.20 g (blocked against XL sides)

Busto no. 14

1. Cargo transport unit

Type:	Trailer, cover /stake, XL	
Floor:	Plyfa	

2. Cargo

Description of cargo:	Steel pipes in bunts	
Number of pieces:	-	*pcs*
Total weight:	27.8	*ton*

3. Securing

Friction factor:	0.3	
Number of lashings:	8	*top-over lashings*
Pre-tension in lashings:	500	*daN*

4. Sketch

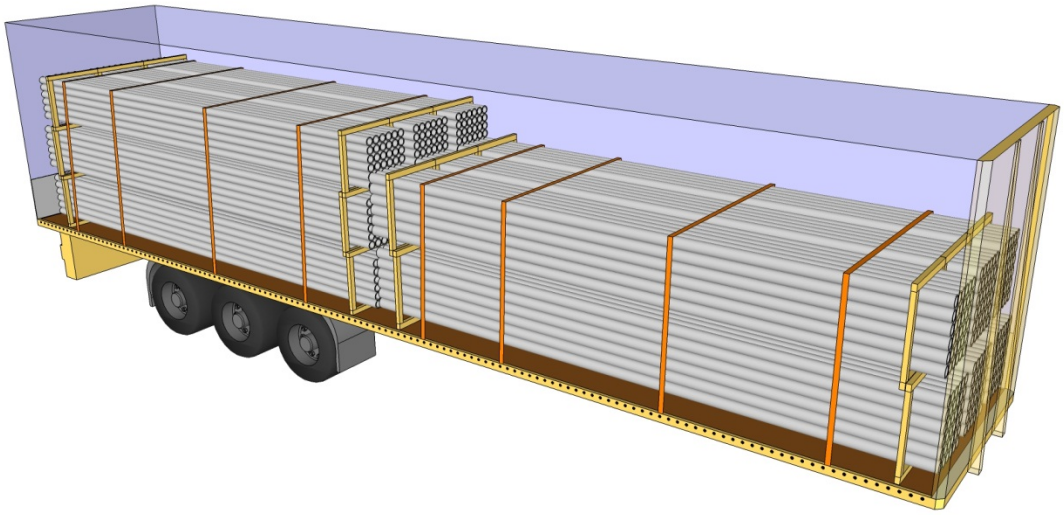

5. Estimated allowable acceleration

Forward:	Blocked against headboard
Rearward:	0.38 g
Sideways:	0.38 g

Busto no. 15

1. Cargo transport unit

Type:	Trailer, curtainsider, XL
Floor:	Plyfa

2. Cargo

Description of cargo:	Pallet cargo, vacuum cleaners	
Number of pieces:	13	*pcs*
Total weight:	6.5	*ton*

3. Securing

Friction factor:	0.45	
Number of lashings:	-	*top-over lashings*
Pre-tension in lashings:	-	*daN*

4. Sketch

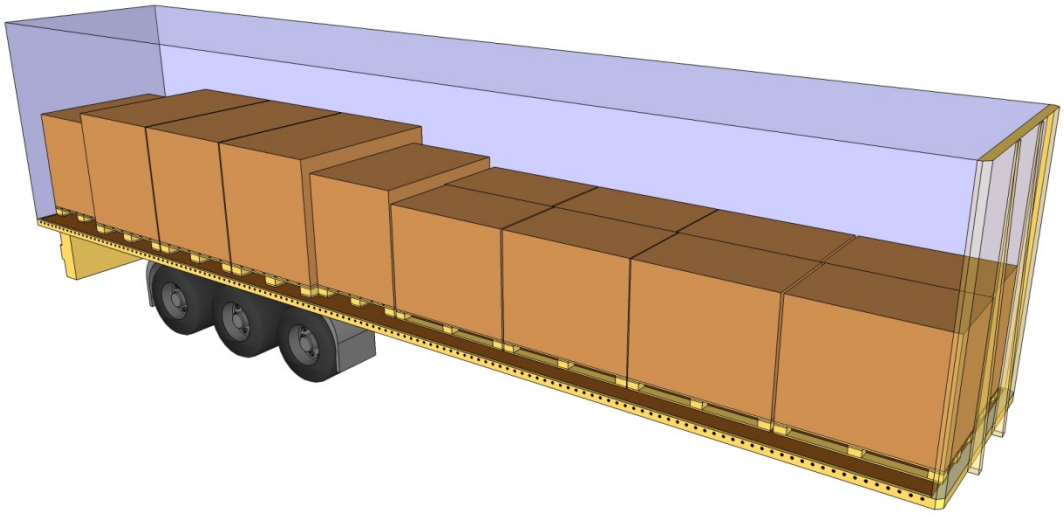

5. Estimated allowable acceleration

Forward:	Blocked against headboard
Rearward:	Blocked against doors
Sideways:	0.45 g (50 % blocked against XL sides)

Köln no. 1

1. Cargo transport unit

Type:	Trailer, cover/stake, non-XL
Floor:	Plyfa

2. Cargo

Description of cargo:	Steel, squared profiles in bunts (35x35 cm) on wooden beams	
Number of pieces:	13	*pcs*
Total weight:	22	*ton*

3. Securing

Friction factor:	0.45	
Number of lashings:	11	*top-over lashings*
Pre-tension in lashings:	350	*daN*

4. Sketch

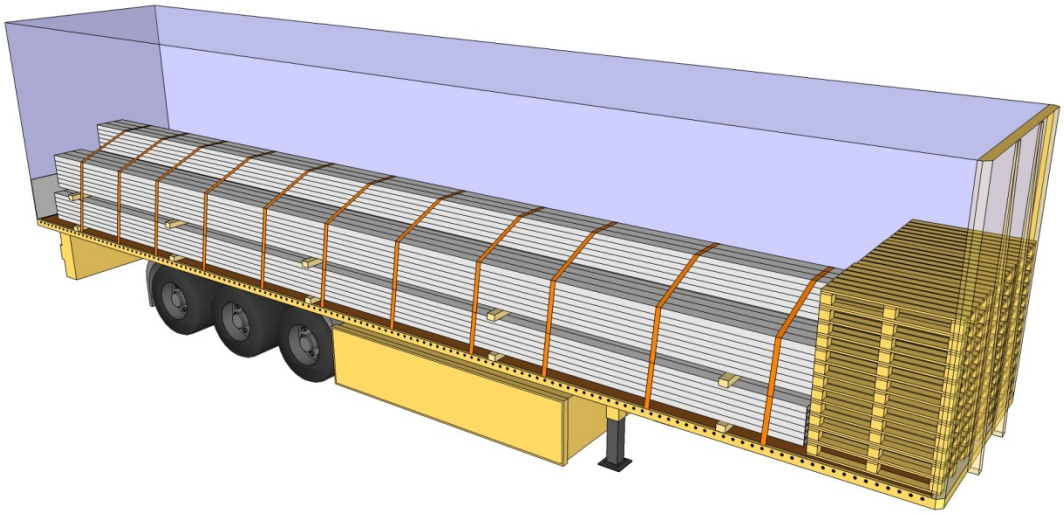

5. Estimated allowable acceleration

Forward:	Blocked against headboard
Rearward:	0.59 g
Sideways:	0.59 g

Köln no. 2

1. Cargo transport unit

Type:	Trailer, curtainsider, XL
Floor:	Plyfa

2. Cargo

Description of cargo:	Pallet cargo, cardboard	
Number of pieces:	-	*pcs*
Total weight:	11.7	*ton*

3. Securing

Friction factor:	0.45	
Number of lashings:	-	*top-over lashings*
Pre-tension in lashings:	-	*daN*

4. Sketch

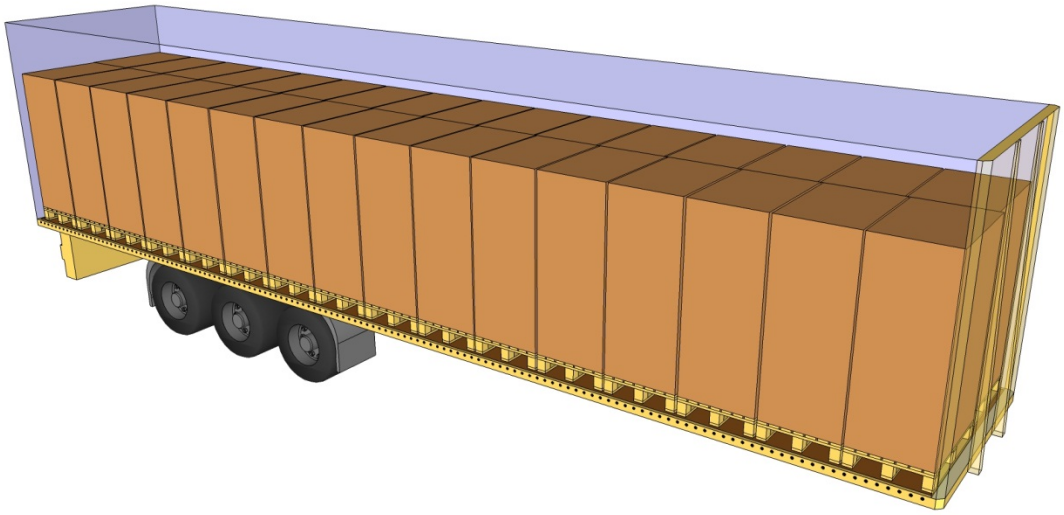

5. Estimated allowable acceleration

Forward:	Blocked against headboard
Rearward:	Blocked against doors
Sideways:	0.45 g (blocked against XL sides)

Köln no. 3

1. Cargo transport unit

Type:	Trailer, cover/stake, non-XL
Floor:	Plyfa

2. Cargo

Description of cargo:	Steel coils in wooden cradles	
Number of pieces:	5	*pcs*
Total weight:	27	*ton*

3. Securing

Friction factor:	0.6	*rubber between coil and cradle*
Number of lashings:	1	*top-over lashings*
	10	*loop-spring lashings*
Pre-tension in lashings:	300	*daN*
Strength in lashings, LC:	2500	*daN*

4. Sketch

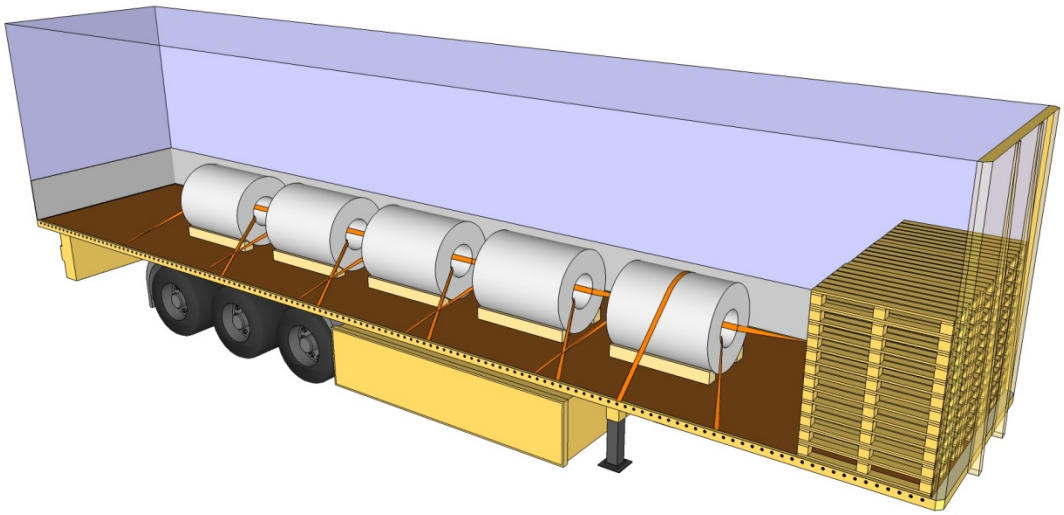

5. Estimated allowable acceleration

Forward:	0.47 g
Rearward:	0.47 g
Sideways:	1.04 g

Köln no. 4

1. Cargo transport unit

Type: Trailer, cover/stake, XL

Floor: Plyfa

2. Cargo

Description of cargo: Stone plates on pallet

Number of pieces: - *pcs*

Total weight: 12.5 *ton*

3. Securing

Friction factor: 0.45

Number of lashings: - *top-over lashings*

Pre-tension in lashings: - *daN*

4. Sketch

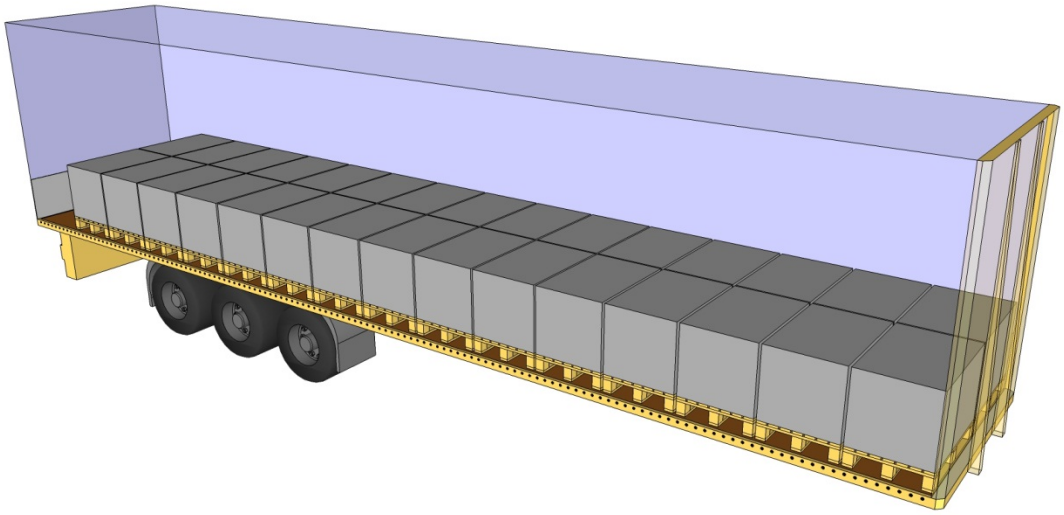

5. Estimated allowable acceleration

Forward: Blocked against headboard

Rearward: 0.45 g

Sideways: 0.45 g (blocked against XL sides)

Köln no. 5

1. Cargo transport unit

Type:	Trailer, cover/stake, XL
Floor:	Plyfa

2. Cargo

Description of cargo:	Steel sheets in bunts	
Number of pieces:	18 bunts	*pcs*
Total weight:	27	*ton*

3. Securing

Friction factor:	0.6 / 0.45	*rubber between bottom layer and platform bed*
Number of lashings:	11	*top-over lashings*
Pre-tension in lashings:	500	*daN*

4. Sketch

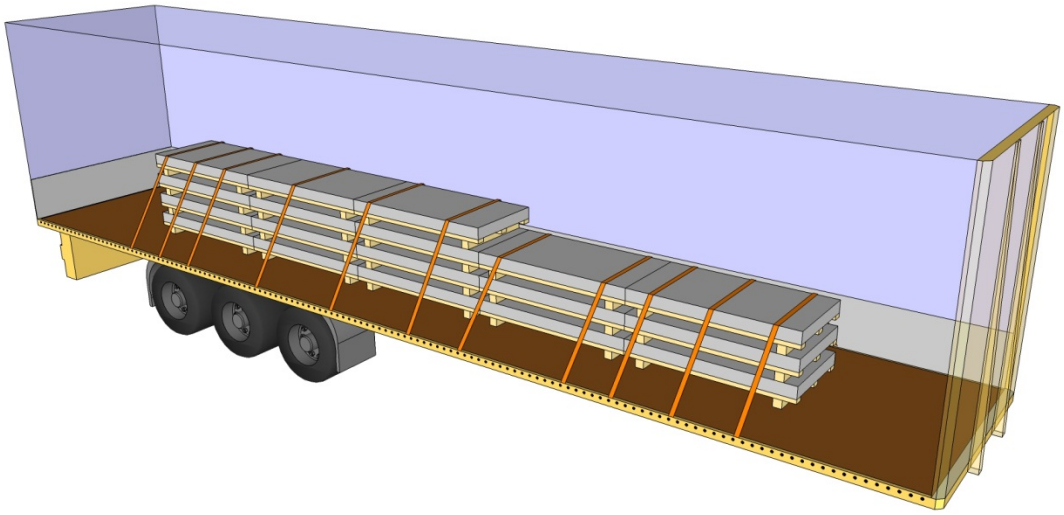

5. Estimated allowable acceleration

Forward:	0.59 g (72%), 0.81 g (28 %)
Rearward:	0.59 g (72%), 0.81 g (28 %)
Sideways:	0.59 g (72%), 0.81 g (28 %)

Köln no. 6

1. Cargo transport unit

Type:	Trailer, curtainsider, XL
Floor:	Plyfa

2. Cargo

Description of cargo:	Aluminium	
Number of pieces:	29	*pcs*
Total weight:	25	*ton*

3. Securing

Friction factor:	0.4	
Number of lashings:	17	*top-over lashings (1 per section)*
Pre-tension in lashings:	400	*daN*

4. Sketch

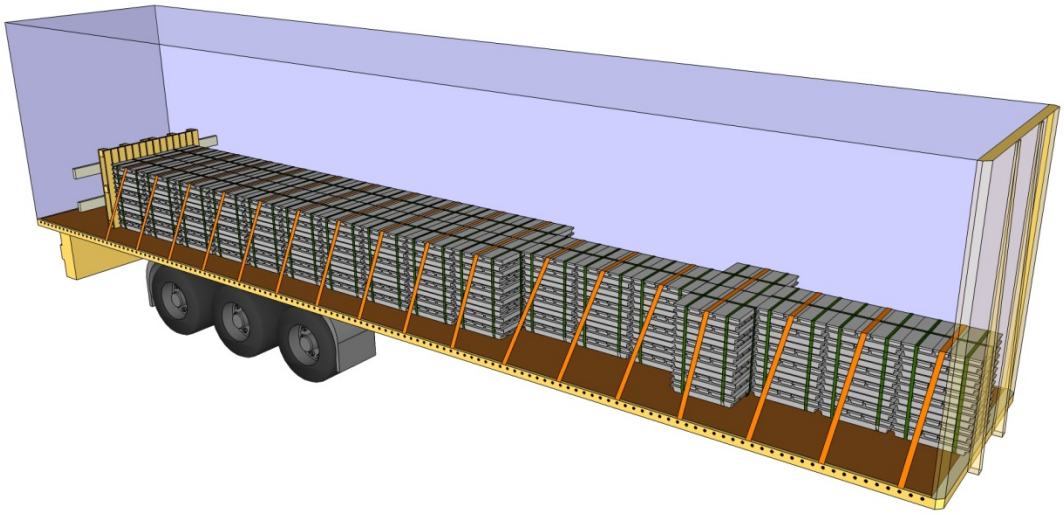

5. Estimated allowable acceleration

Forward:	Blocked against headboard
Rearward:	0.58 g
Sideways:	0.55 g

Köln no. 7

1. Cargo transport unit

Type: Trailer, curtainsider, XL

Floor: Plyfa

2. Cargo

Description of cargo: Steel profiles in bunts on wooden beams

Number of pieces: 7+4 *Pcs*

Total weight: 30 *ton*

3. Securing

Friction factor: 0.3

Number of lashings: 7 *top-over lashings*

Pre-tension in lashings: 100 *daN*

Steel profiles are blocked against side stanchions

4. Sketch

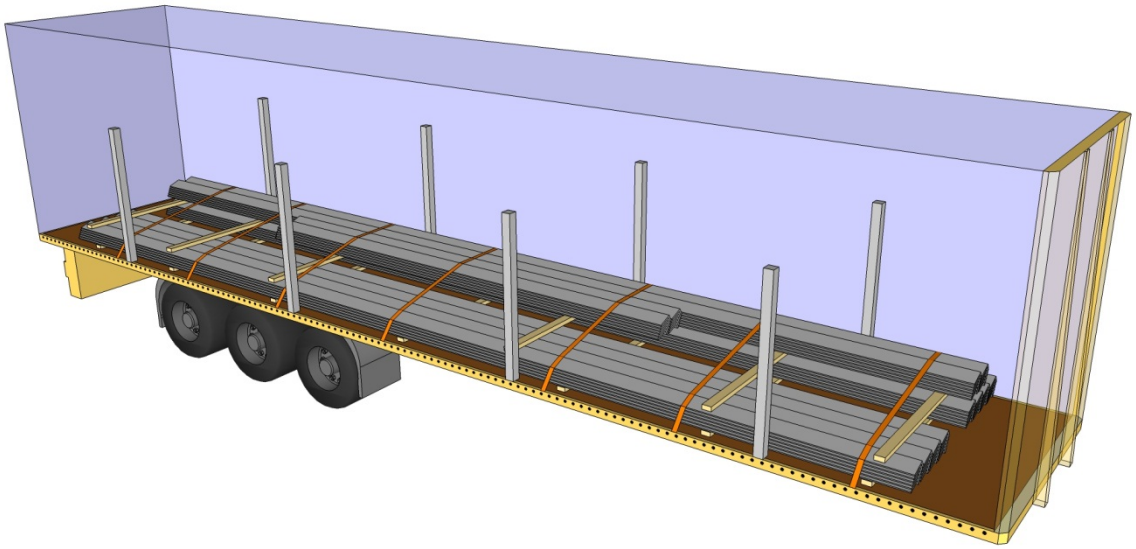

5. Estimated allowable acceleration

Forward: 0.31 g

Rearward: 0.31 g

Sideways: Blocked against side stanchions

Köln no. 8

1. Cargo transport unit

Type: Trailer, curtainsider, XL

Floor: Plyfa

2. Cargo

Description of cargo: Paper reels, standing, zig-zag

Number of pieces: 30 *pcs*

Total weight: 28.1 *ton*

3. Securing

Friction factor: 0.5

Number of lashings: 7 *round-turn lashings around groups of 4 reels*

Pre-tension in lashings: - *daN*

Two wedges with 3 nails in each wedge are placed behind the two last reels

4. Sketch

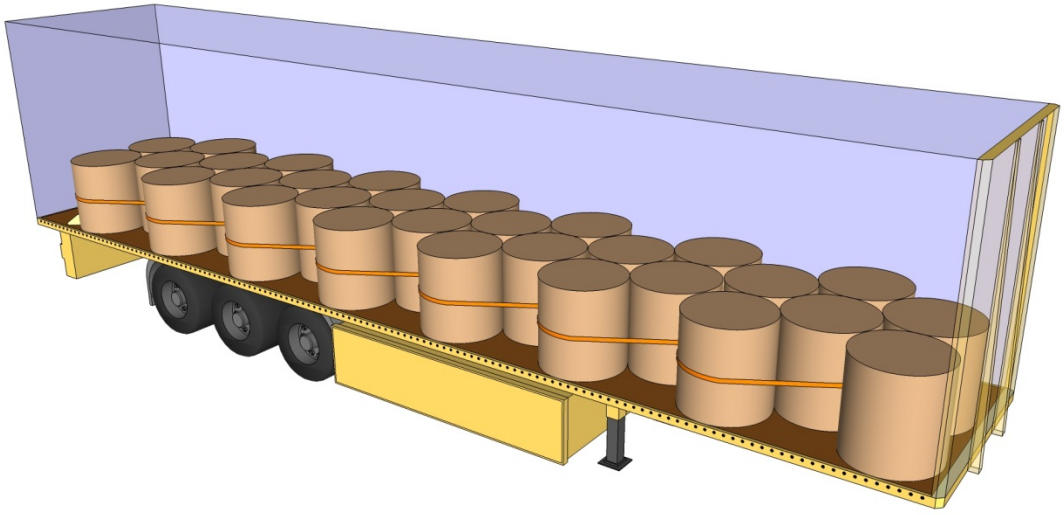

5. Estimated allowable acceleration

Forward: Blocked against headboard

Rearward: 0.53 g

Sideways: 0.50 g

Köln no. 9

1. Cargo transport unit

Type:	Trailer, curtainsider, XL
Floor:	Plyfa

2. Cargo

Description of cargo:	Wheel boogies, train	
Number of pieces:	10	*Pcs*
Total weight:	26.5	*ton*

3. Securing

Friction factor:	0.45	
Number of lashings:	10	*top-over lashings*
Pre-tension in lashings:	300	*daN*

4. Sketch

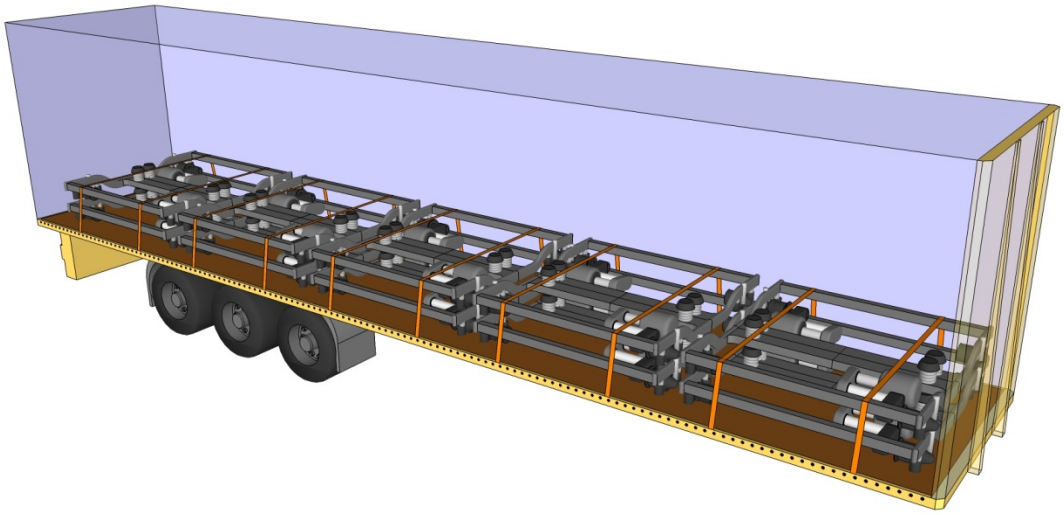

5. Estimated allowable acceleration

Forward:	0.54 g
Rearward:	0.45 g
Sideways:	0.45 g (blocked against XL sides)

Köln no. 10

1. Cargo transport unit

Type:	Trailer, curtainsider, non-XL
Floor:	Plyfa

2. Cargo

Description of cargo:	Steel profiles in bunts on wooden beams	
Number of pieces:	6+6	*pcs*
Total weight:	30	*ton*

3. Securing

Friction factor:	0.45	
Number of lashings:	8	*top-over lashings*
Pre-tension in lashings:	400	*daN*

4. Sketch

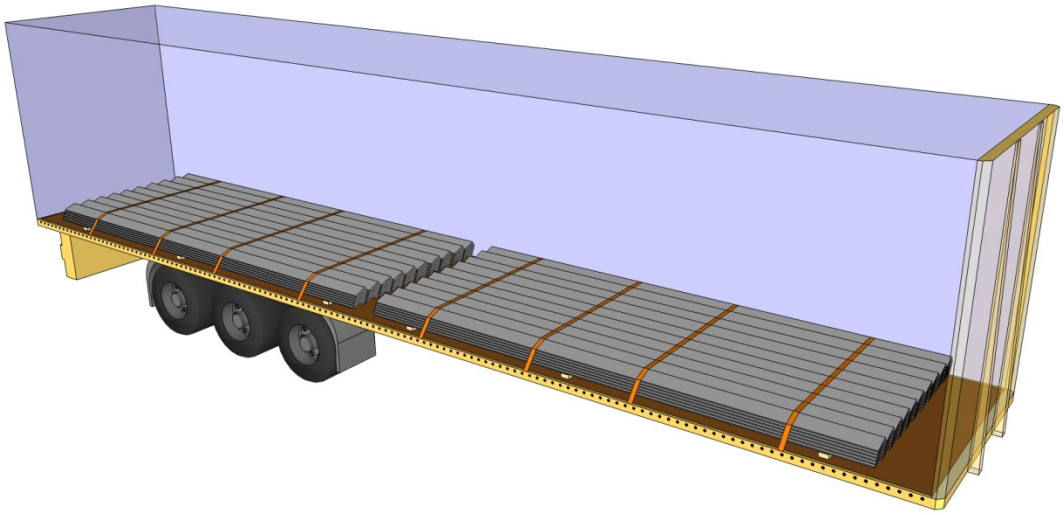

5. Estimated allowable acceleration

Forward:	0.53 g
Rearward:	0.53 g
Sideways:	0.53 g

Köln no. 11

1. Cargo transport unit

Type:	Trailer, cover/stake
Floor:	Plyfa

2. Cargo

Description of cargo:	Iron bars in bunts on wooden beams	
Number of pieces:	6+6	*pcs*
Total weight:	27	*ton*

3. Securing

Friction factor:	0.3	
Number of lashings:	12	*top-over lashings*
Pre-tension in lashings:	400	*daN*

4. Sketch

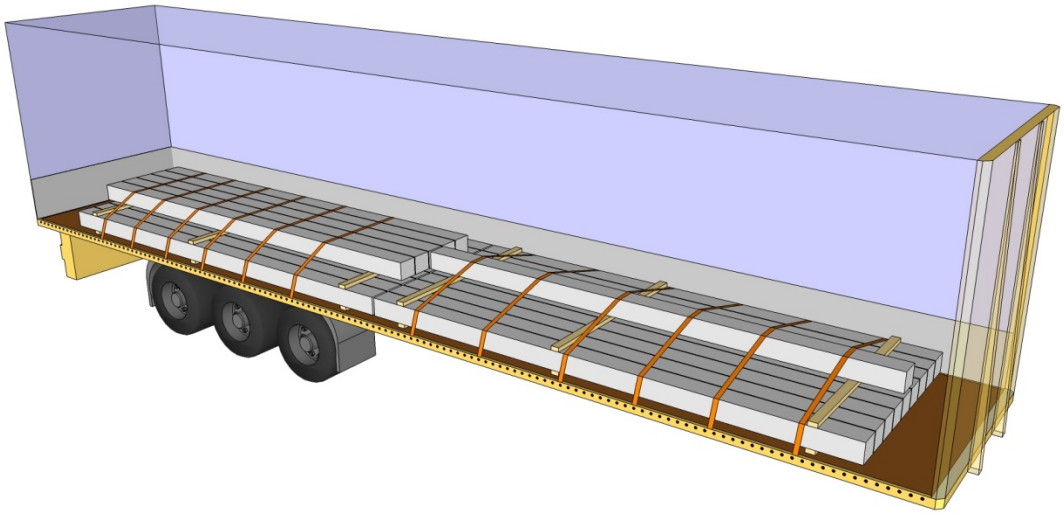

5. Estimated allowable acceleration

Forward:	0.39 g
Rearward:	0.39 g
Sideways:	0.39 g

Köln no. 12

1. Cargo transport unit

Type:	Trailer, curtainsider, non-XL	
Floor:	Plyfa	

2. Cargo

Description of cargo:	Steel pipes in bunts on wooden beams	
Number of pieces:	11+6	*pcs*
Total weight:	27.2	*ton*

3. Securing

Friction factor:	0.3	
Number of lashings:	10	*top-over lashings*
Pre-tension in lashings:	400	*daN*

4. Sketch

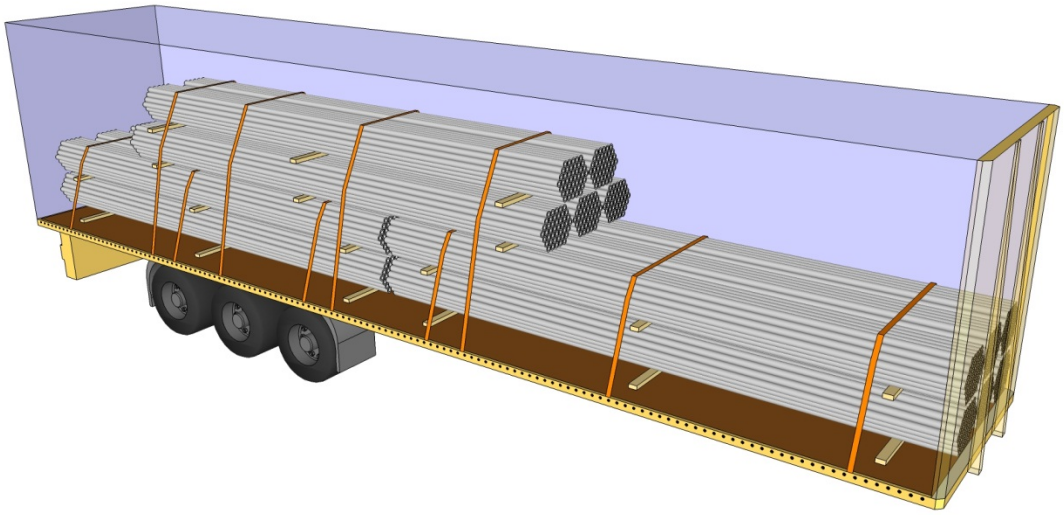

5. Estimated allowable acceleration

Forward:	Blocked against headboard (70%), 0.40 g (29%)
Rearward:	0.37 g
Sideways:	0.37 g

Köln no. 13

1. Cargo transport unit

Type: Trailer, curtainsider, XL

Floor: Plyfa

2. Cargo

Description of cargo: Steel slab on beams

Number of pieces: 1 *pcs*

Total weight: 25.2 *ton*

3. Securing

Friction factor: 0.6 *Rubber between steel slab and*

Number of lashings: 6 *top-over lashings*

Pre-tension in lashings: 550 *daN*

4. Sketch

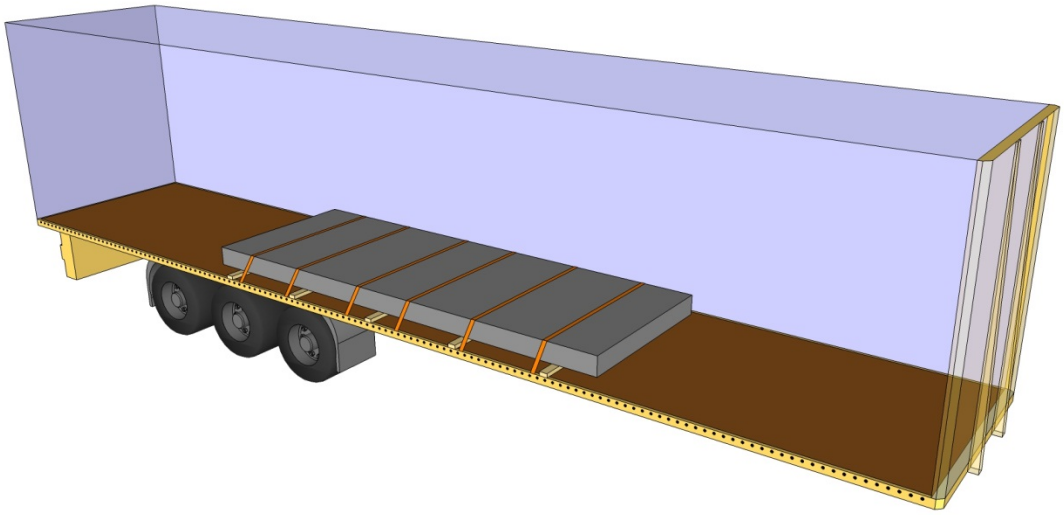

5. Estimated allowable acceleration

Forward: 0.72 g

Rearward: 0.72 g

Sideways: 0.72 g

Köln no. 14

1. Cargo transport unit

Type: Trailer, curtainsider, XL

Floor: Plyfa

2. Cargo

Description of cargo: Pallet cargo (plastic)

Number of pieces: 24 *pcs*

Total weight: 21 *ton*

3. Securing

Friction factor: 0.45

Number of lashings: - *top-over lashings*

Pre-tension in lashings: - *daN*

4. Sketch

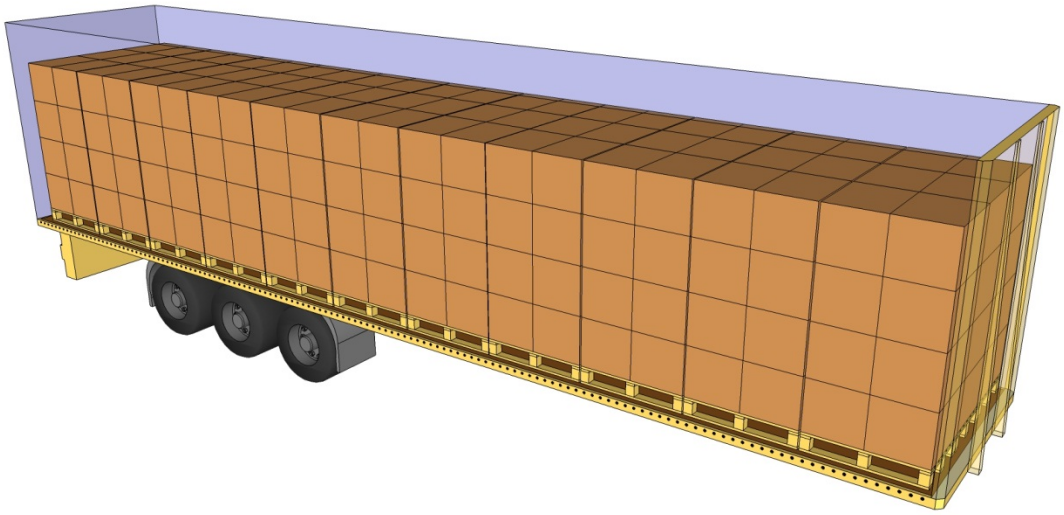

5. Estimated allowable acceleration

Forward: Blocked against headboard

Rearward: 0.45 g

Sideways: 0.45 g (blocked against XL sides)

Köln no. 15

1. Cargo transport unit

Type: Trailer, curtainsider, XL

Floor: Plyfa

2. Cargo

Description of cargo: Machineries, aircondition

Number of pieces: - *pcs*

Total weight: 10 *ton*

3. Securing

Friction factor: 0.45

Number of lashings: - *top-over lashings*

Pre-tension in lashings: - *daN*

4. Sketch

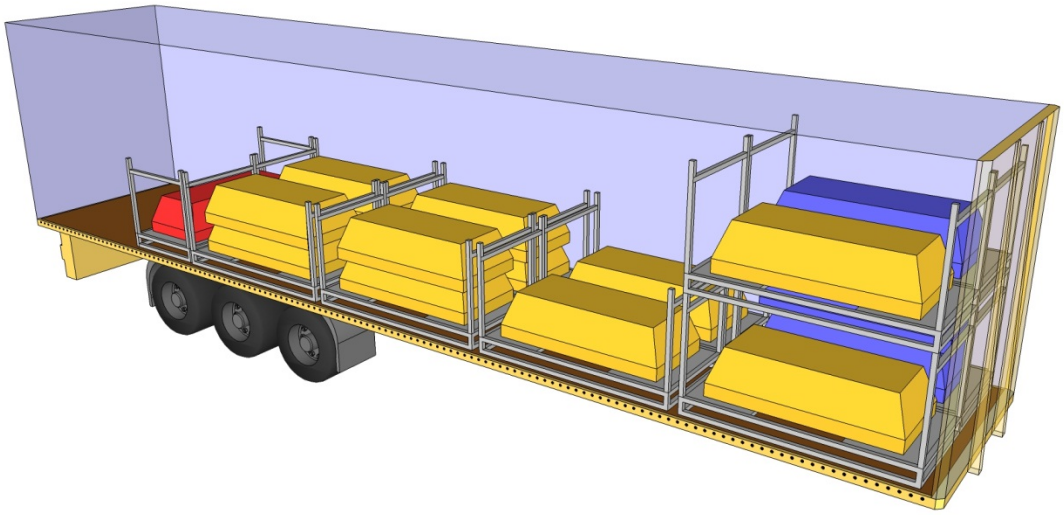

5. Estimated allowable acceleration

Forward: Blocked against headboard

Rearward: 0.45 g

Sideways: 0.45 g (blocked against XL sides)

Köln no. 16

1. Cargo transport unit

Type: Swap body 20 ft., cover/stake

Floor: Plyfa

2. Cargo

Description of cargo: Pallet cargo

Number of pieces: 20 *pcs*

Total weight: 22.6 *ton*

3. Securing

Friction factor: 0.45

Number of lashings: 5 *top-over lashings (1 per section)*

Pre-tension in lashings: 100 *daN*

4. Sketch

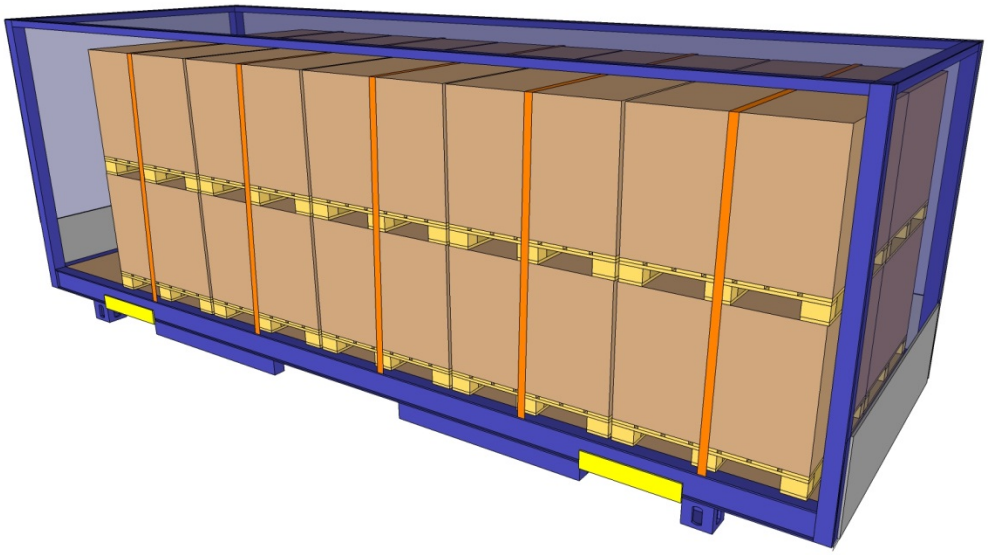

5. Estimated allowable acceleration

Forward: Blocked against end wall

Rearward: 0.47 g

Sideways: 0.47 g

Köln no. 17

1. Cargo transport unit

Type: Swap body 20 ft., cover/stake

Floor: Plyfa

2. Cargo

Description of cargo: Big bags

Number of pieces: 10 *pcs*

Total weight: 10 *ton*

3. Securing

Friction factor: 0.4

Number of lashings: 2 *top-over lashings*

Pre-tension in lashings: 100 *daN*

4. Sketch

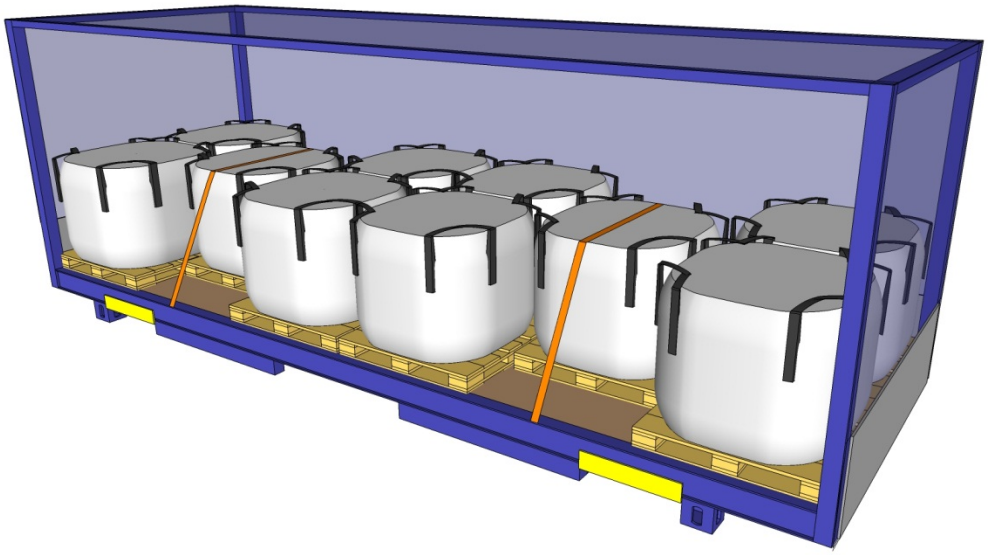

5. Estimated allowable acceleration

Forward: Blocked against end wall

Rearward: 0.52 g

Sideways: Blocked against sideboard (80%), 0.58 g (20%)

Köln no. 18

1. Cargo transport unit

Type:	Trailer, curtainsider, XL	
Floor:	Plyfa	

2. Cargo

Description of cargo:	Concrete, pallet cargo	
Number of pieces:	16+1	*pcs*
Total weight:	24.3	*ton*

3. Securing

Friction factor:	0.45	
Number of lashings:	13	*top-over lashings*
Pre-tension in lashings:	250	*daN*

4. Sketch

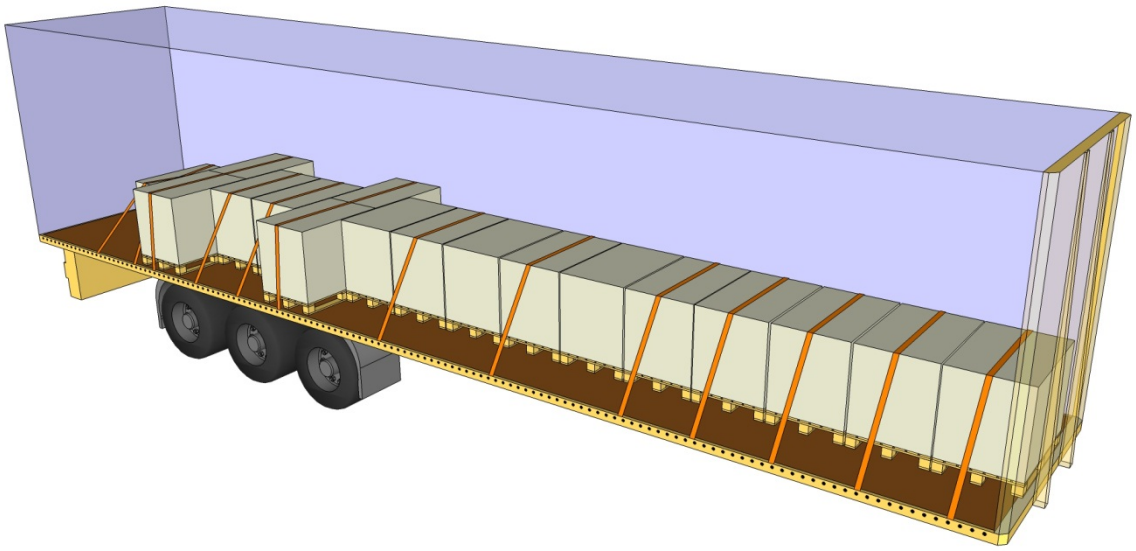

5. Estimated allowable acceleration

Forward:	Blocked against headboard
Rearward:	0.55 g
Sideways:	0.57 g (53%), 0.60 g (23.5%), 0.45 g (18%), 0.69 g (5.5%)

Köln no. 19

1. Cargo transport unit

Type: Swap-body 45 ft. cover/stake

Floor: Plyfa

2. Cargo

Description of cargo: Pallet cargo

Number of pieces: 49 *pcs*

Total weight: 30 *ton*

3. Securing

Friction factor: 0.45

Number of lashings: 11 *top-over lashings (1 per section)*

Pre-tension in lashings: 50 *daN*

Blocking by a horizontal beam with blocking capacity 400 daN in rearward direction

4. Sketch

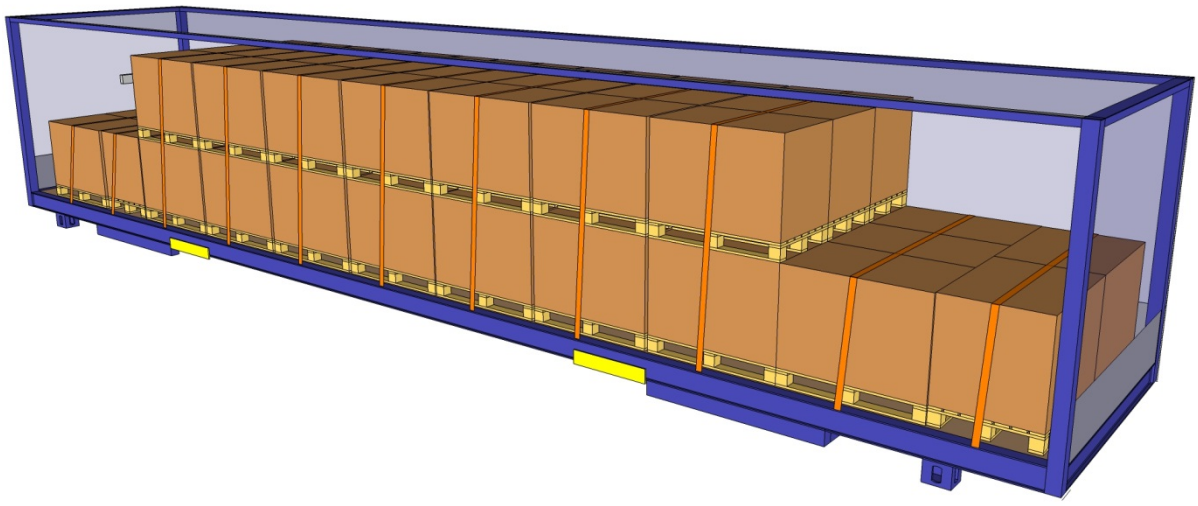

5. Estimated allowable acceleration

Forward: Blocked against end wall (57%), 0.48 g (43%)

Rearward: 0.47 g (57%), 0.52 g (43%)

Sideways: Blocked against sideboard (57%), 0.48 g (43%)

Köln no. 20

1. Cargo transport unit

Type: Swap-body 20 ft. cover/stake

Floor: Plyfa

2. Cargo

Description of cargo: Pallet cargo

Number of pieces: 8 *pcs*

Total weight: 17.6 *ton*

3. Securing

Friction factor: 0.45

Number of lashings: 4 *top-over lashings (1 per section)*

Pre-tension in lashings: 200 *daN*

4. Sketch

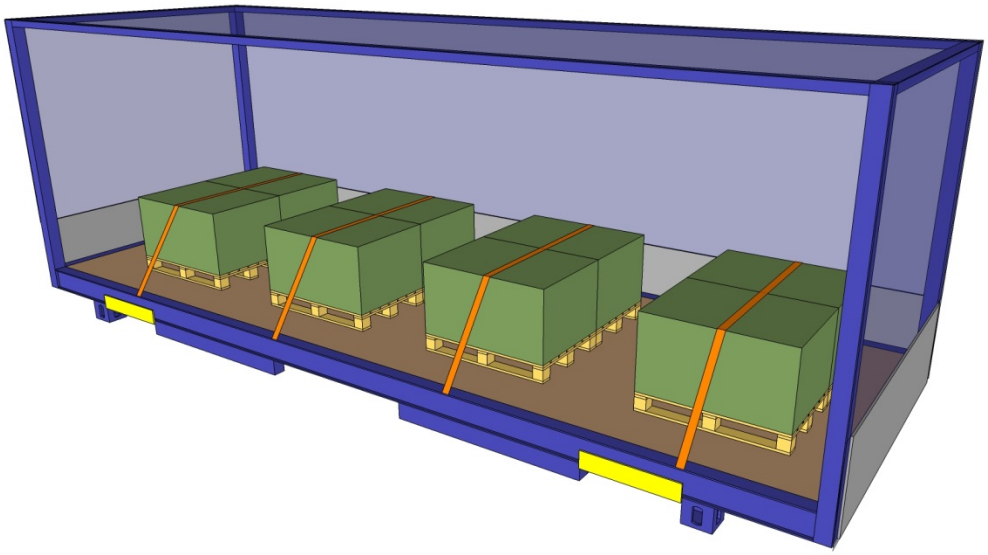

5. Estimated allowable acceleration

Forward: 0.48 g

Rearward: 0.48 g

Sideways: 0.48 g

Köln no. 21

1. Cargo transport unit

Type: Swap-body 20 ft. cover/stake

Floor: Plyfa

2. Cargo

Description of cargo: Pallet cargo

Number of pieces: 16 *Pcs*

Total weight: 8.6 *ton*

3. Securing

Friction factor: 0.45

Number of lashings: - *top-over lashings*

Pre-tension in lashings: - *daN*

4. Sketch

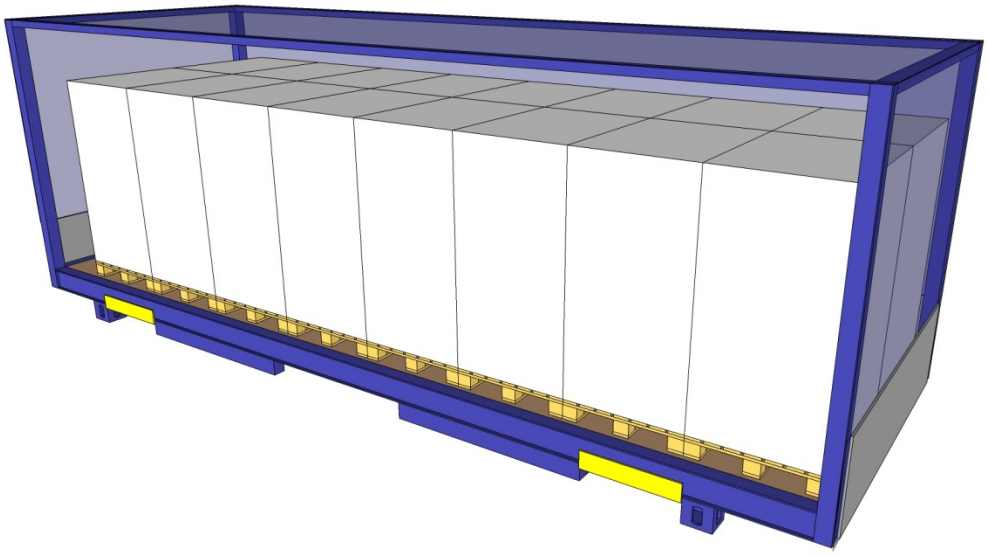

5. Estimated allowable acceleration

Forward: Blocked against end wall

Rearward: 0.45 g

Sideways: 0.45 g

Köln no. 22

1. Cargo transport unit

Type: Swap-body 20 ft. curtainsider

Floor: Plyfa

2. Cargo

Description of cargo: Pallet cargo

Number of pieces: 16 *pcs*

Total weight: 8.6 *ton*

3. Securing

Friction factor: 0.45

Number of lashings: - *top-over lashings*

Pre-tension in lashings: - *daN*

4. Sketch

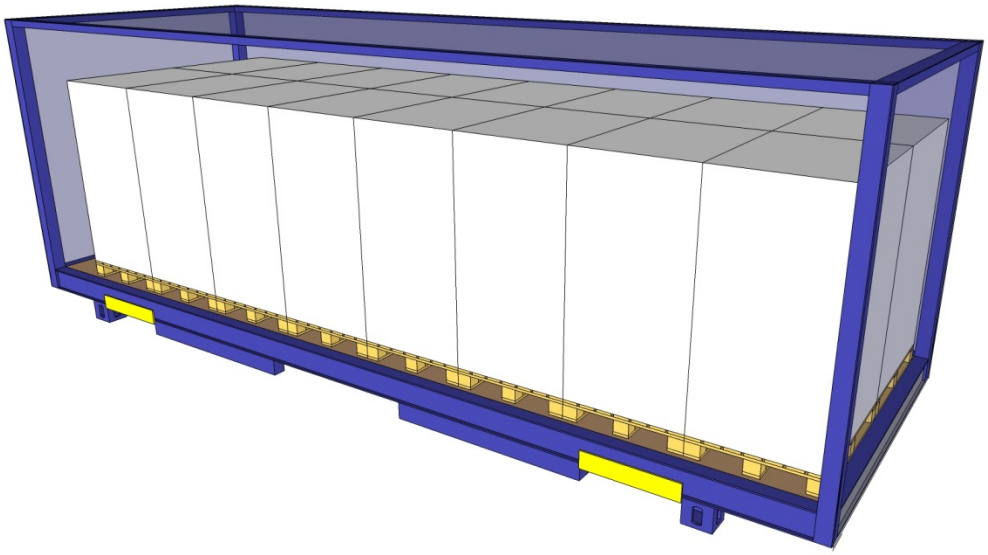

5. Estimated allowable acceleration

Forward: Blocked against end wall

Rearward: 0.45 g

Sideways: 0.45 g

Köln no. 23

1. Cargo transport unit

Type: Trailer, curtainsider, non-XL

Floor: Plyfa

2. Cargo

Description of cargo: Lead

Number of pieces: 22 *Pcs*

Total weight: 27 *ton*

3. Securing

Friction factor: 0.6 *rubber between lead and platform bed*

Number of lashings: 22 *top-over lashings (2 per section)*

Pre-tension in lashings: 600 *daN*

4. Sketch

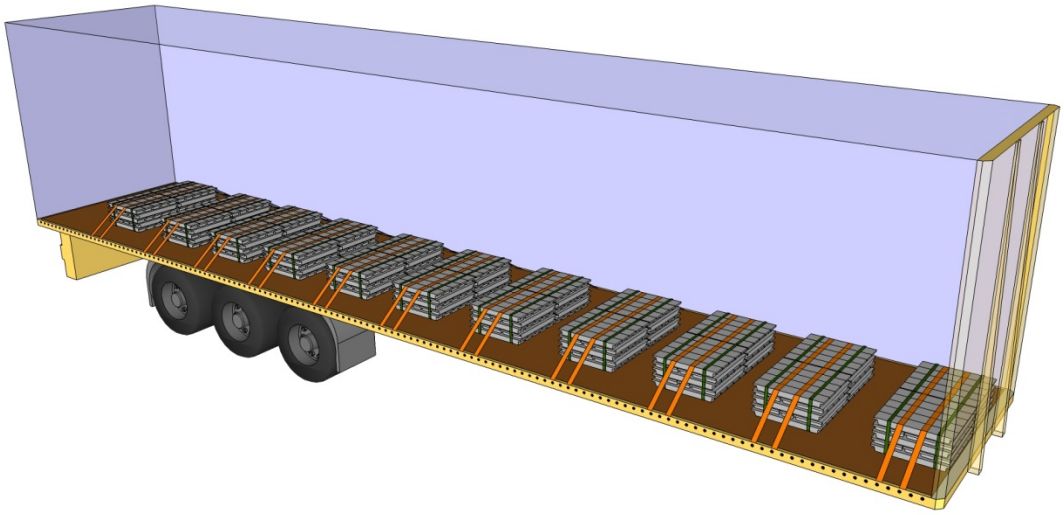

5. Estimated allowable acceleration

Forward: 0.90 g

Rearward: 0.90 g

Sideways: 0.90 g

Köln no. 24

1. Cargo transport unit

Type:	Trailer, curtainsider, XL
Floor:	Plyfa

2. Cargo

Description of cargo:	Stone plates on pallet	
Number of pieces:	36	*pcs*
Total weight:	28	*ton*

3. Securing

Friction factor:	0.45 / 0.3	
Number of lashings:	16	*top-over lashings*
Pre-tension in lashings:	250	*daN*

4. Sketch

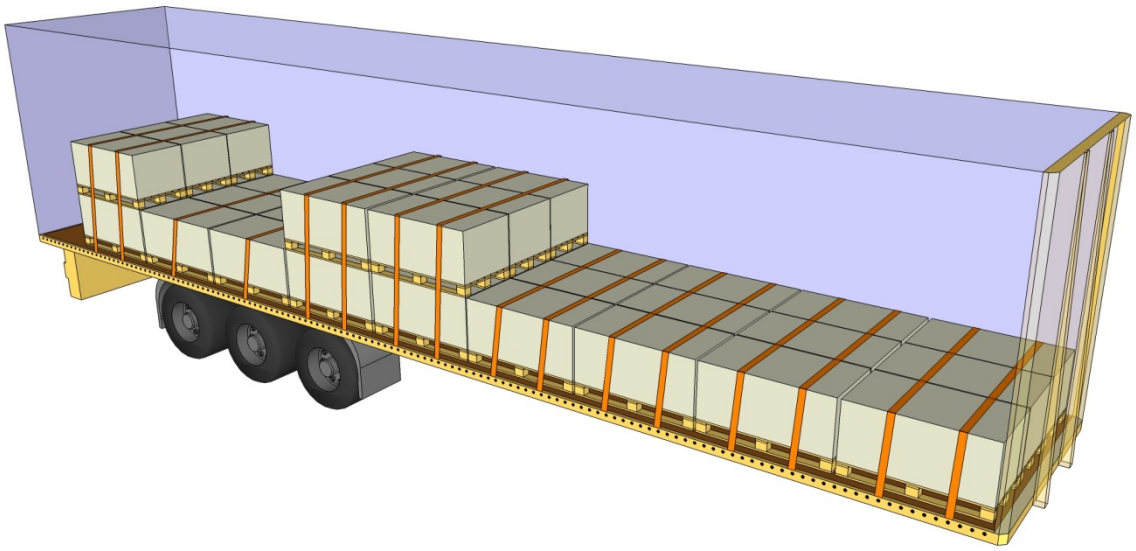

5. Estimated allowable acceleration

Forward:	Blocked against headboard (75%), 0.34 g (25%)
Rearward:	0.57 g (57%), 0.43 g (25%)
Sideways:	0.63 g (42%), 0.54 g (33%), 0.42 g (25%)

Köln no. 25

1. Cargo transport unit

Type:	Trailer, curtainsider, non-XL	
Floor:	Plyfa	

2. Cargo

Description of cargo:	Steel sheets	
Number of pieces:	18	*pcs*
Total weight:	27.7	*ton*

3. Securing

Friction factor:	0.4 / 0.6	
Number of lashings:	13	*top-over lashings*
Pre-tension in lashings:	500	*daN*

4. Sketch

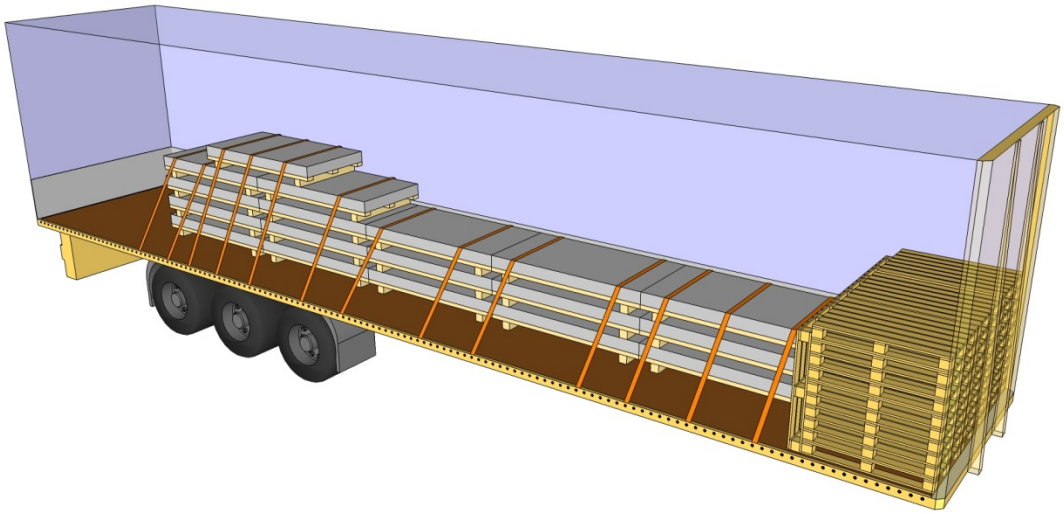

5. Estimated allowable acceleration

Forward:	Blocked against headboard (83%), 0.72 g (17%)
Rearward:	0.56 g (72%), 0.77 g (28%)
Sideways:	0.54 g (39%), 0.56 g (22%), 0.76 g (22%), 0.64 g (11%), 0.84 g (6%)

Köln no. 26

1. Cargo transport unit

Type:	Trailer, cover/stake, non-XL
Floor:	Plyfa

2. Cargo

Description of cargo:	Steel coils in cradle	
Number of pieces:	1	*pcs*
Total weight:	23.6	*ton*

3. Securing

Friction factor:	0.6	
Number of lashings:	1	*top-over lashings*
	2	*loop-spring lashings*
Pre-tension in lashing:	100	*daN*
Strength in lashings, LC:	2000	*daN*

4. Sketch

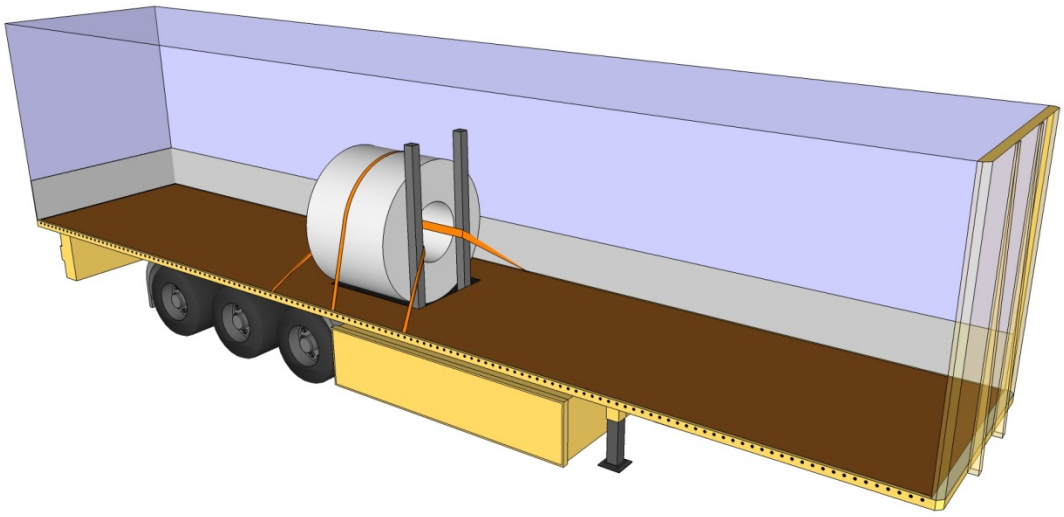

5. Estimated allowable acceleration

Forward:	Blocked against stanchions
Rearward:	0.63 g
Sideways:	0.78 g

Köln no. 27

1. Cargo transport unit

Type:	Swap body 45 ft., curtainsider
Floor:	Plyfa

2. Cargo

Description of cargo:	Steel profiles, bunts on wooden beams	
Number of pieces:	11	*pcs*
Total weight:	27.5	*ton*

3. Securing

Friction factor:	0.6	*rubber between each layer*
Number of lashings:	7	*top-over lashings*
	1	*spring lashing forward (β = 75˚)*
Pre-tension in lashings:	225	*daN*
Strength in lashing, LC:	2000	*daN*

4. Sketch

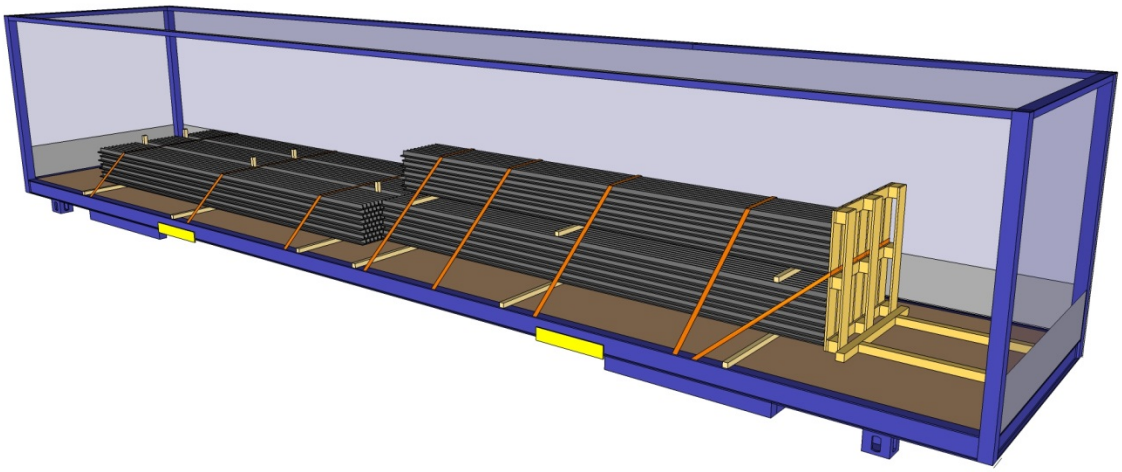

5. Estimated allowable acceleration

Forward:	≈ 0.85 g
Rearward:	0.65 g
Sideways:	0.65 g

Köln no. 28

1. Cargo transport unit

Type:	Trailer, curtainsider, XL
Floor:	Plyfa

2. Cargo

Description of cargo:	Paper reels, standing + pallets	
Number of pieces:	20	*Pcs*
Total weight:	27	*ton*

3. Securing

Friction factor:	0.6	*Rubber, also between layer of reels*
Number of lashings:	13	*top-over lashings (1 per section)*
Pre-tension in lashings:	350	*daN*

4. Sketch

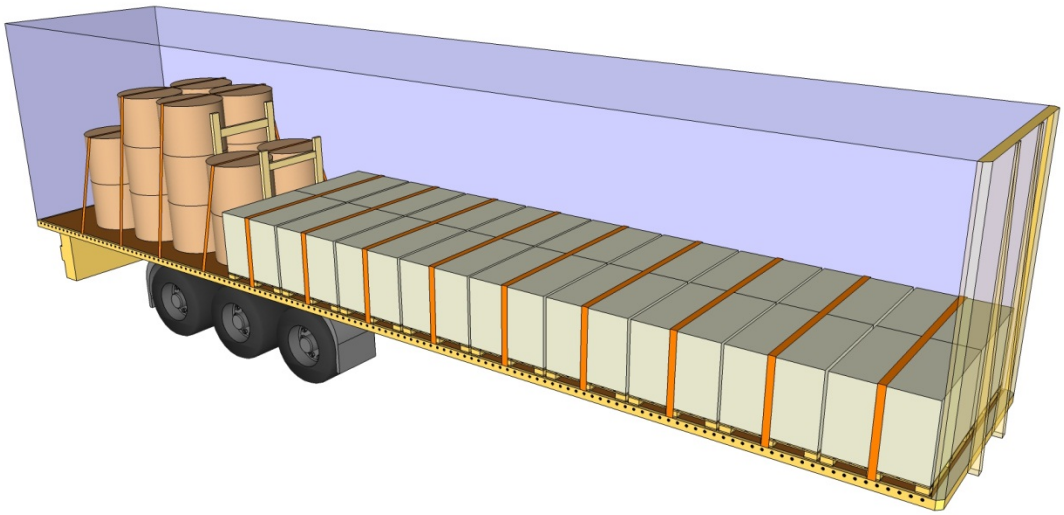

5. Estimated allowable acceleration

Forward:	Blocked against headboard
Rearward:	0.78 g
Sideways:	0.84 g (53%), 0.75 g (28%), 0.70 g (19%)

Köln no. 29

1. Cargo transport unit

Type:	Trailer, curtainsider, XL	
Floor:	Plyfa	

2. Cargo

Description of cargo:	Pallet cargo, cardboard	
Number of pieces:	50	*Pcs*
Total weight:	20	*ton*

3. Securing

Friction factor:	0.45	
Number of lashings:	-	*top-over lashings*
Pre-tension in lashings:	-	*daN*

4. Sketch

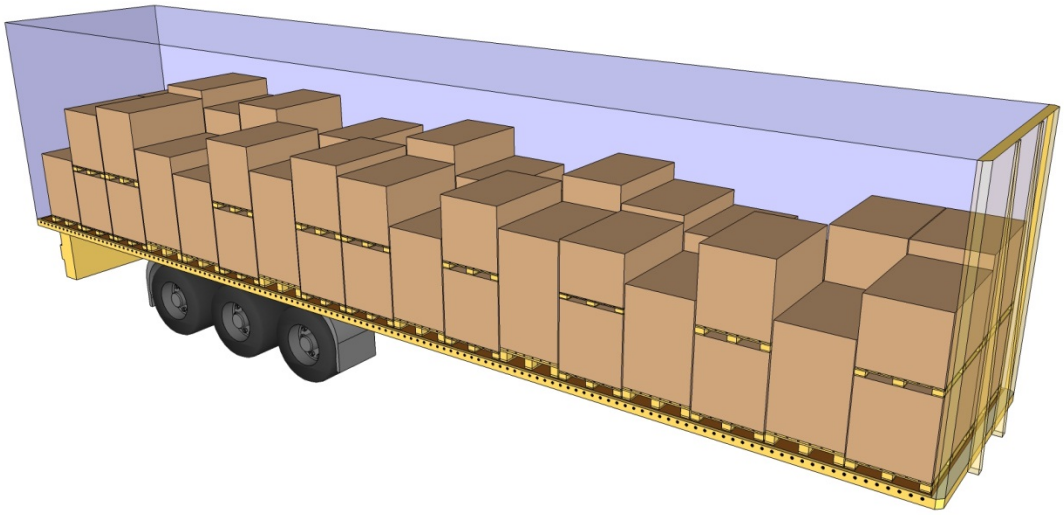

5. Estimated allowable acceleration

Forward:	Blocked against headboard
Rearward:	0.45 g
Sideways:	0.45 g (50% blocked against XL sides)

Köln no. 30

1. Cargo transport unit

Type:	Trailer, cover/stake, non-XL
Floor:	Plyfa

2. Cargo

Description of cargo:	Steel coils, laying in wooden cradles	
Number of pieces:	4	*Pcs*
Total weight:	28	*ton*

3. Securing

Friction factor:	0.45	
Number of lashings:	12	*top-over lashings*
Pre-tension in lashings:	300	*daN*

4. Sketch

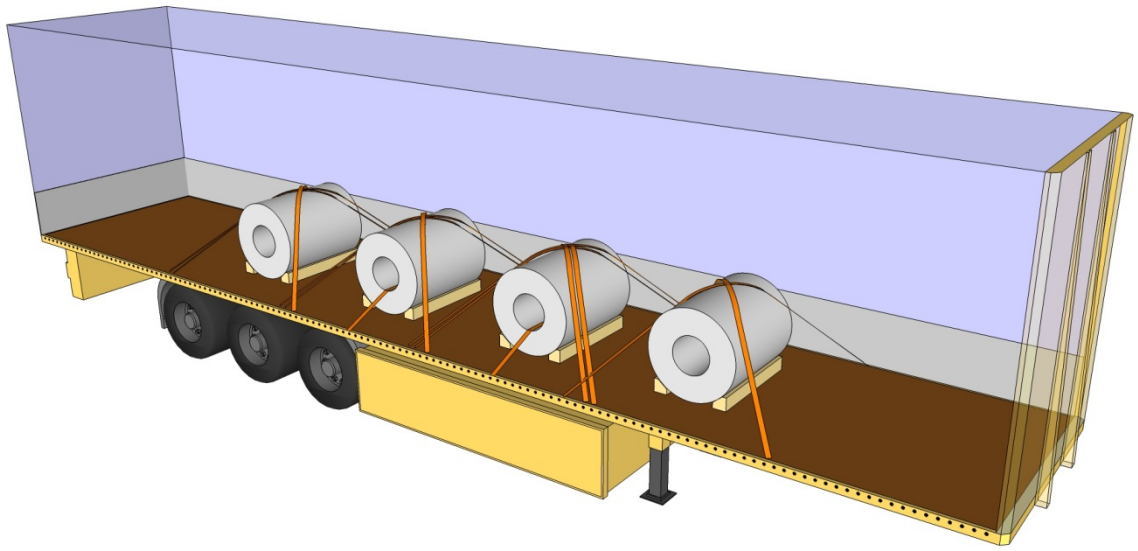

5. Estimated allowable acceleration

Forward:	0.53 g
Rearward:	0.53 g
Sideways:	0.35 g

Köln no. 31

1. Cargo transport unit

Type: Trailer, cover/stake, non-XL

Floor: Plyfa

2. Cargo

Description of cargo: Steel, squared profiles in bunts

Number of pieces: 10+10 *Pcs*

Total weight: 27.9 *ton*

3. Securing

Friction factor: 0.45 / 0.6 *rubber against platform bed only*

Number of lashings: 10 *top-over lashings*

Pre-tension in lashings: 400 *daN*

4. Sketch

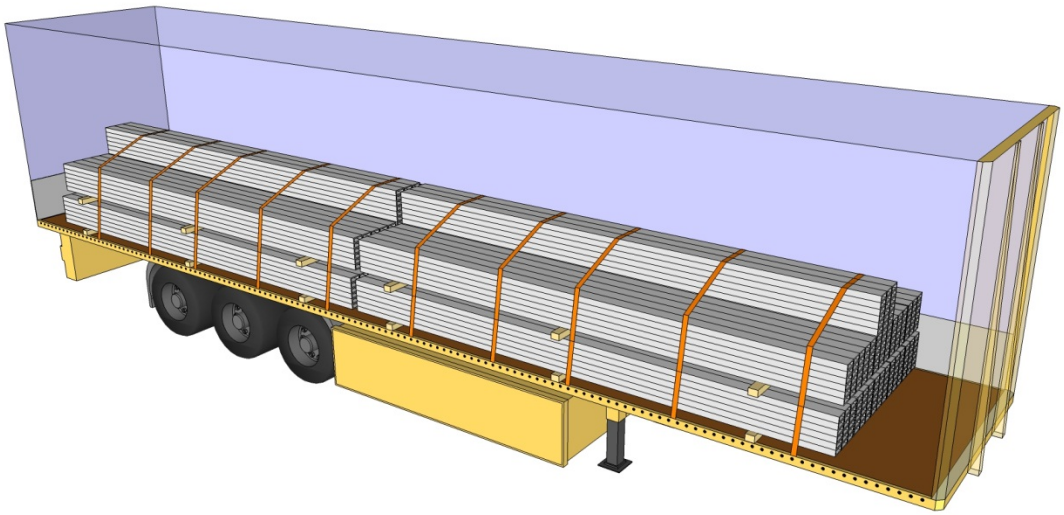

5. Estimated allowable acceleration

Forward: 0.61 g (70%), 0.75 g (30%)

Rearward: 0.61 g (70%), 0.75 g (30%)

Sideways: 0.61 g (70%), 0.75 g (30%)

Lübeck no. 1

1. Cargo transport unit

Type:	Trailer, curtainsider, XL
Floor:	Plyfa

2. Cargo

Description of cargo:	Copper wire	
Number of pieces:	5	*Pcs*
Total weight:	25	*ton*

3. Securing

Friction factor:	0.4	
Number of lashings:	10	*top-over lashings*
	5	*spring lashings forward*
Pre-tension in lashings:	340	*daN*
Strength in lashings, LC:	2500	*daN*

4. Sketch

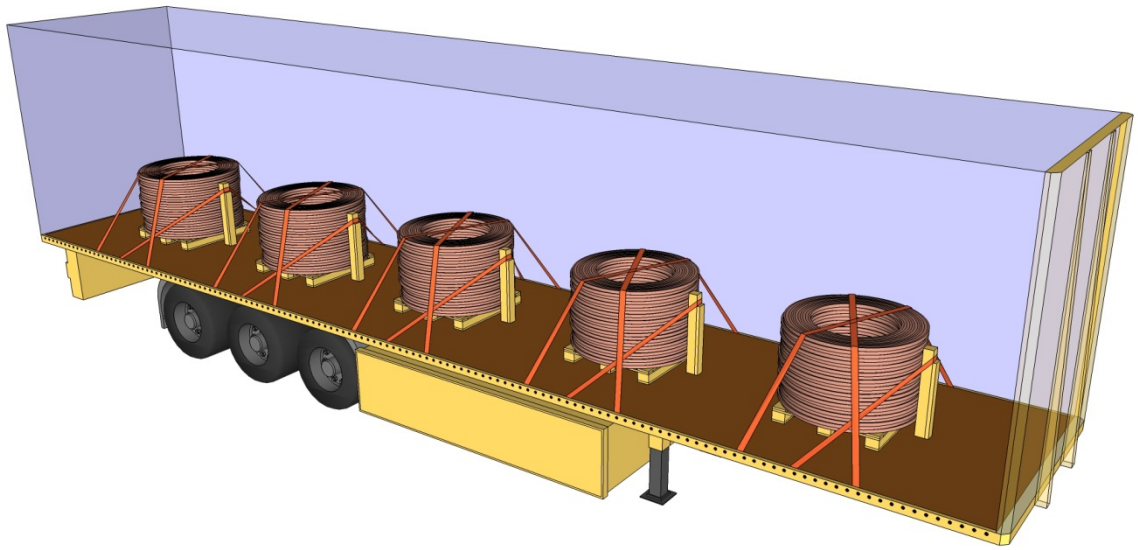

5. Estimated allowable acceleration

Forward:	1.24 g
Rearward:	0.49 g
Sideways:	0.49 g

Lübeck no. 2

1. Cargo transport unit

Type:	Trailer, curtainsider, XL
Floor:	Plyfa

2. Cargo

Description of cargo:	Wooden packages on beams (standing)	
Number of pieces:	11	*Pcs*
Total weight:	23.3	*ton*

3. Securing

Friction factor:	0.45	
Number of lashings:	8	*top-over lashings*
Pre-tension in lashings:	400	*daN*

4. Sketch

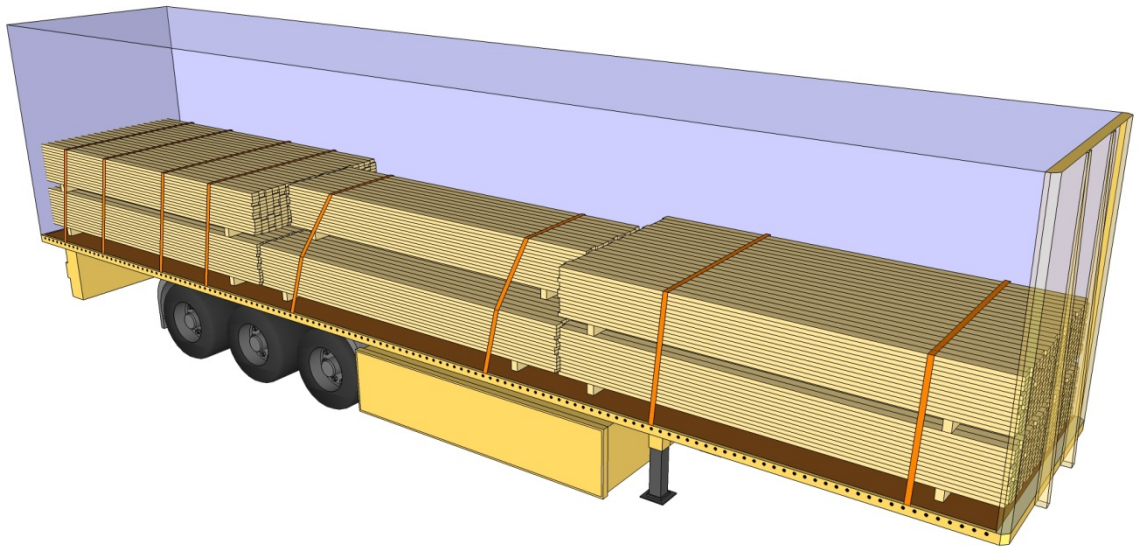

5. Estimated allowable acceleration

Forward:	Blocked against headboard
Rearward:	0.56 g
Sideways:	0.60 g (36%), 0.53 g (36%), 0.55 g (28%)

Lübeck no. 3

1. Cargo transport unit

Type:	Trailer, curtainsider, XL	
Floor:	Plyfa	

2. Cargo

Description of cargo:	General cargo	
Number of pieces:	-	*Pcs*
Total weight:	8	*ton*

3. Securing

Friction factor:	0.4	
Number of lashings:	11	*top-over lashings*
Pre-tension in lashings:	150	*daN*

4. Sketch

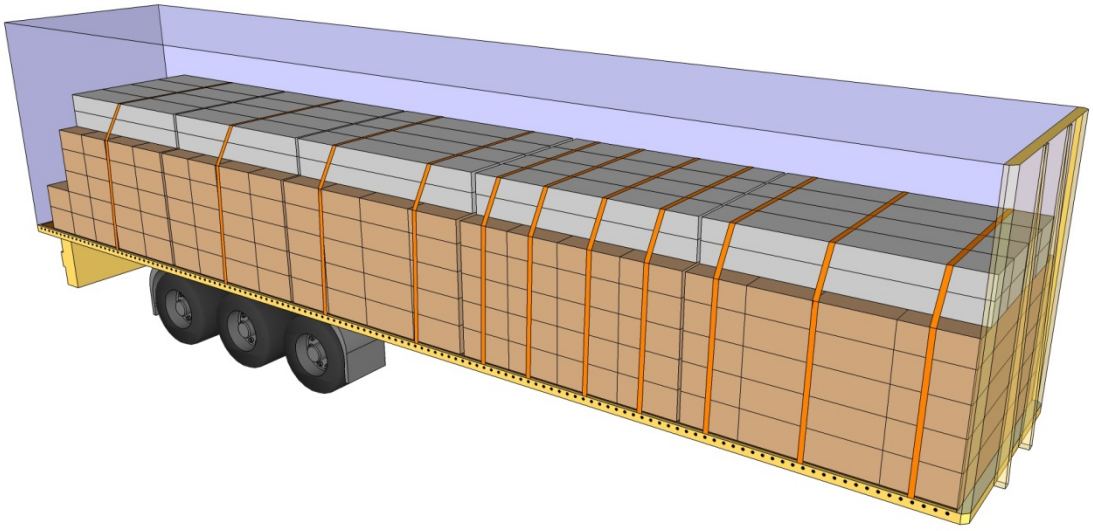

5. Estimated allowable acceleration

Forward:	Blocked against headboard
Rearward:	0.55 g
Sideways:	0.55 g

Lübeck no. 4

1. Cargo transport unit

Type:	Trailer, curtainsider, XL
Floor:	Plyfa

2. Cargo

Description of cargo:	Steel racks	
Number of pieces:	126	*Pcs*
Total weight:	16.3	*ton*

3. Securing

Friction factor:	0.45	
Number of lashings:	6	*top-over lashings (1 per section)*
Pre-tension in lashings:	350	*daN*

4. Sketch



5. Estimated allowable acceleration

Forward:	Blocked against headboard
Rearward:	Blocked against doors
Sideways:	0.45 g (blocked against XL sides)

Lübeck no. 5

1. Cargo transport unit

Type:	Trailer, curtainsider, XL
Floor:	Plyfa

2. Cargo

Description of cargo:	Steel racks	
Number of pieces:	78	*Pcs*
Total weight:	9.3	*ton*

3. Securing

Friction factor:	0.45	
Number of lashings:	13	*top-over lashings (1 per section)*
Pre-tension in lashings:	65	*daN*

4. Sketch

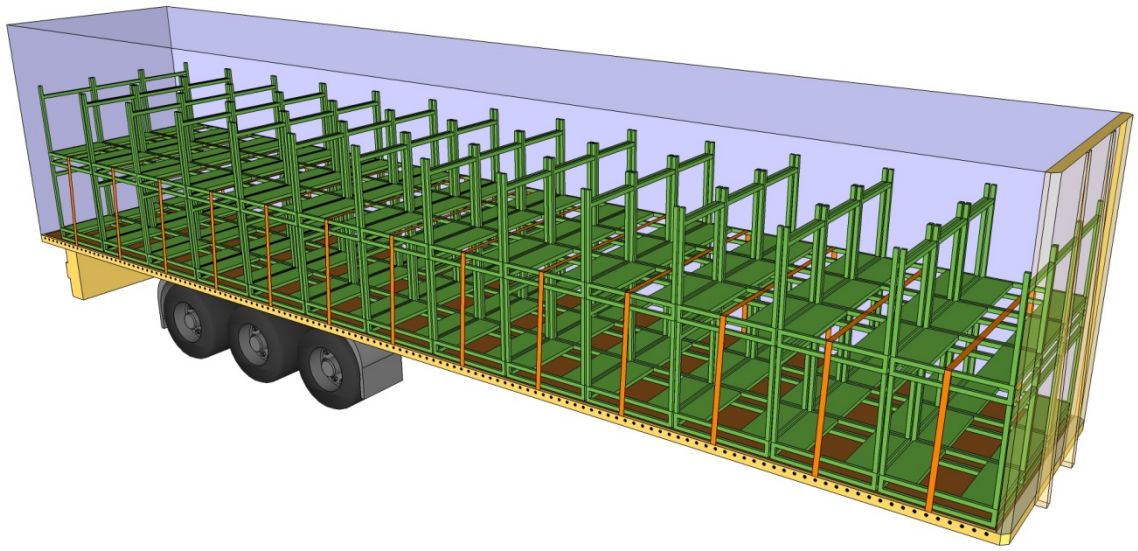

5. Estimated allowable acceleration

Forward:	Blocked against headboard
Rearward:	0.53 g
Sideways:	0.53 g (blocked against XL sides)

Lübeck no. 6

1. Cargo transport unit

Type:	Trailer, curtainsider, XL
Floor:	Plyfa

2. Cargo

Description of cargo:	Timber packages	
Number of pieces:	11	*Pcs*
Total weight:	22	*ton*

3. Securing

Friction factor:	0.45	
Number of lashings:	10	*top-over lashings*
Pre-tension in lashings:	400	*daN*

4. Sketch

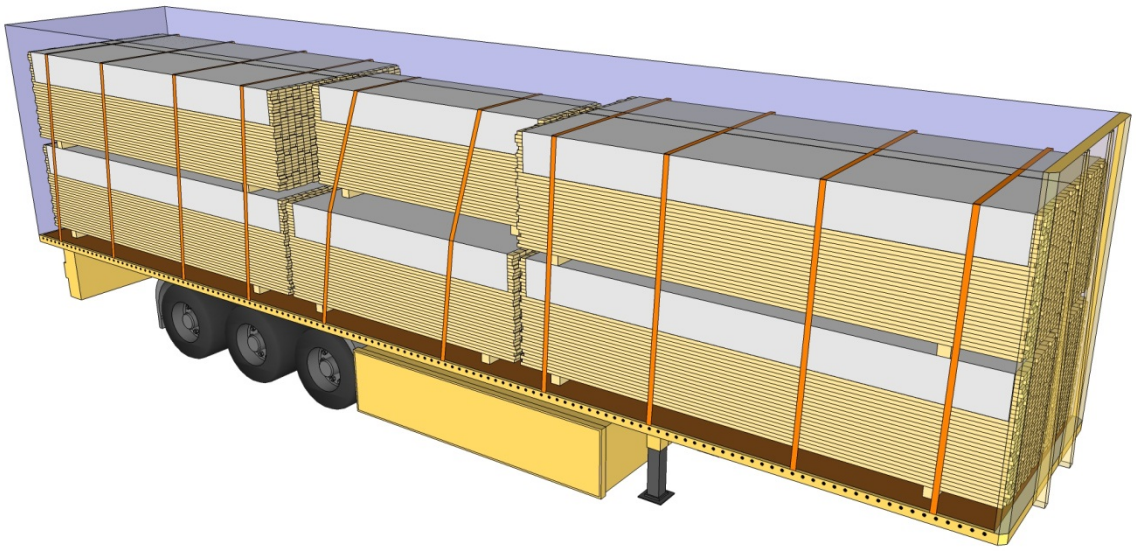

5. Estimated allowable acceleration

Forward:	Blocked against headboard
Rearward:	Blocked against doors
Sideways:	0.62 g (73%), 0.56 g (27%)

Lübeck no. 7

1. Cargo transport unit

Type:	Trailer, curtainsider, XL
Floor:	Plyfa

2. Cargo

Description of cargo:	Racks, steel/plastic	
Number of pieces:	136	*Pcs*
Total weight:	16.3	*ton*

3. Securing

Friction factor:	0.2 / 0.45	
Number of lashings:	8	*top-over lashings (1 per section)*
Pre-tension in lashings:	350	*daN*

4. Sketch

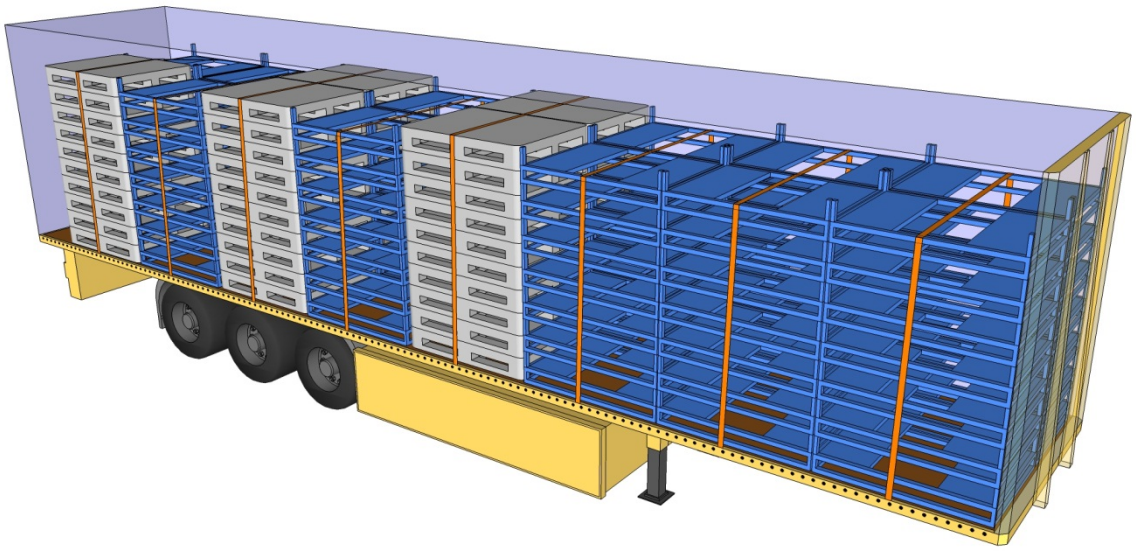

5. Estimated allowable acceleration

Forward:	Blocked against headboard
Rearward:	0.53 g
Sideways:	0.55 g (86%), 0.52 g (14%)

Lübeck no. 8

1. Cargo transport unit

Type:	Trailer, curtainsider, XL
Floor:	Plyfa

2. Cargo

Description of cargo:	Steel racks, 4 containers	
Number of pieces:	-	*Pcs*
Total weight:	14	*ton*

3. Securing

Friction factor:	0.45	
Number of lashings:	8	*top-over lashings (1 per section)*
Pre-tension in lashings:	450	*daN*

4. Sketch



5. Estimated allowable acceleration

Forward:	Blocked against headboard
Rearward:	0.66 g
Sideways:	0.66 g

Lübeck no. 9

1. Cargo transport unit

Type:	Trailer, curtainsider, XL
Floor:	Plyfa

2. Cargo

Description of cargo:	Empty pallets	
Number of pieces:	476	*Pcs*
Total weight:	17.5	*ton*

3. Securing

Friction factor:	0.45	
Number of lashings:	17	*top-over lashings (1 per section)*
Pre-tension in lashings:	50	*daN*

4. Sketch

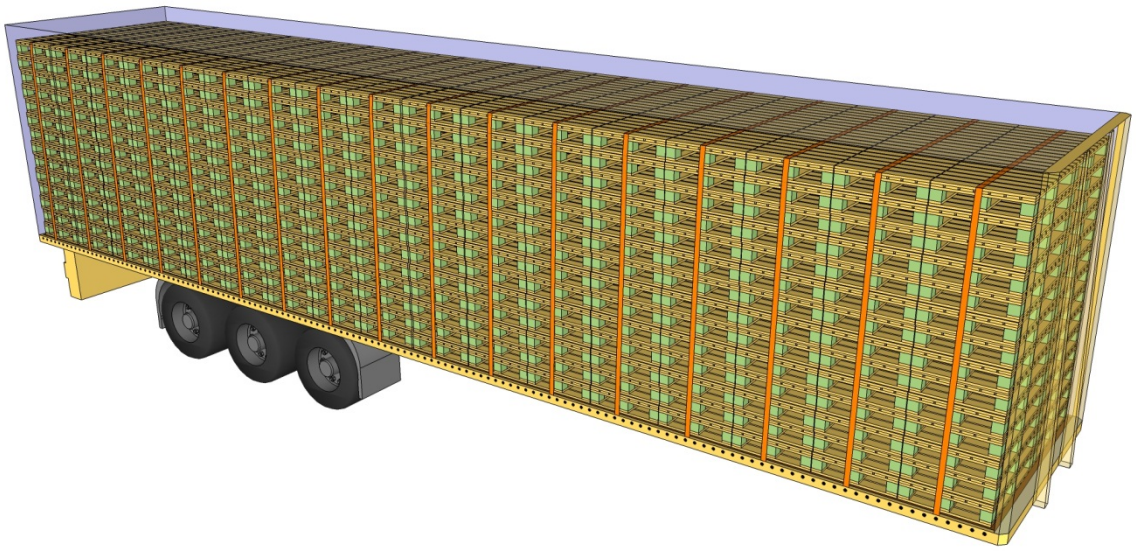

5. Estimated allowable acceleration

Forward:	Blocked against headboard
Rearward:	0.49 g
Sideways:	0.49 g

Lübeck no. 10

1. Cargo transport unit

Type:	Trailer, curtainsider, XL
Floor:	Plyfa

2. Cargo

Description of cargo:	Cans	
Number of pieces:	28	*Pcs*
Total weight:	25	*ton*

3. Securing

Friction factor:	0.45	
Number of lashings:	-	*top-over lashings*
Pre-tension in lashings:	-	*daN*

4. Sketch

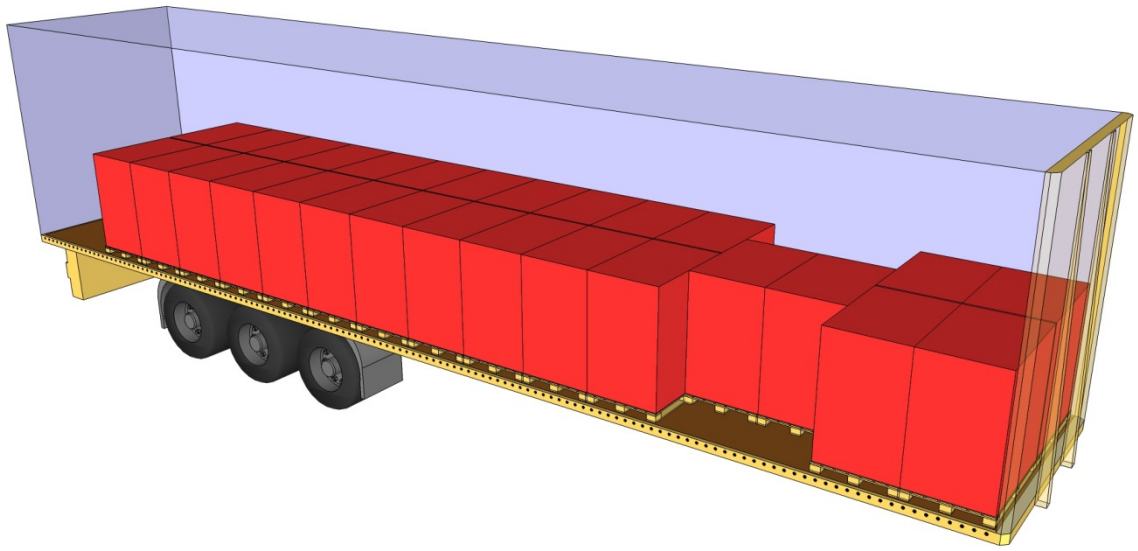

5. Estimated allowable acceleration

Forward:	Blocked against headboard
Rearward:	0.45 g
Sideways:	0.45 g (blocked against XL sides)

Lübeck no. 11

1. Cargo transport unit

Type:	Trailer, curtainsider, XL
Floor:	Plyfa

2. Cargo

Description of cargo:	Bales	
Number of pieces:	24	*Pcs*
Total weight:	24	*ton*

3. Securing

Friction factor:	0.3	
Number of lashings:	12	*top-over lashings (1 per section)*
Pre-tension in lashings:	400	*daN*

4. Sketch

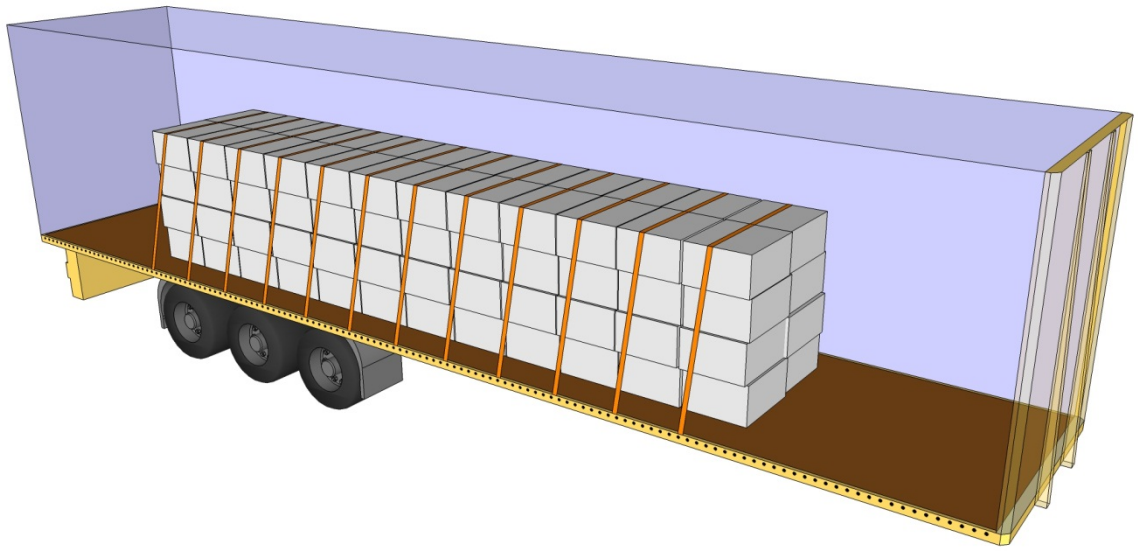

5. Estimated allowable acceleration

Forward:	0.41 g
Rearward:	0.41 g
Sideways:	0.41 g

Lübeck no. 12

1. Cargo transport unit

Type: Trailer, curtainsider, XL

Floor: Plyfa

2. Cargo

Description of cargo: Copper sheets on beams

Number of pieces: 11 *Pcs*

Total weight: 27.3 *ton*

3. Securing

Friction factor: 0.45

Number of lashings: 13 *top-over lashings*

Pre-tension in lashings: 500 *daN*

Stanchion between section 7 and 8 which is blocking 4 sections

4. Sketch

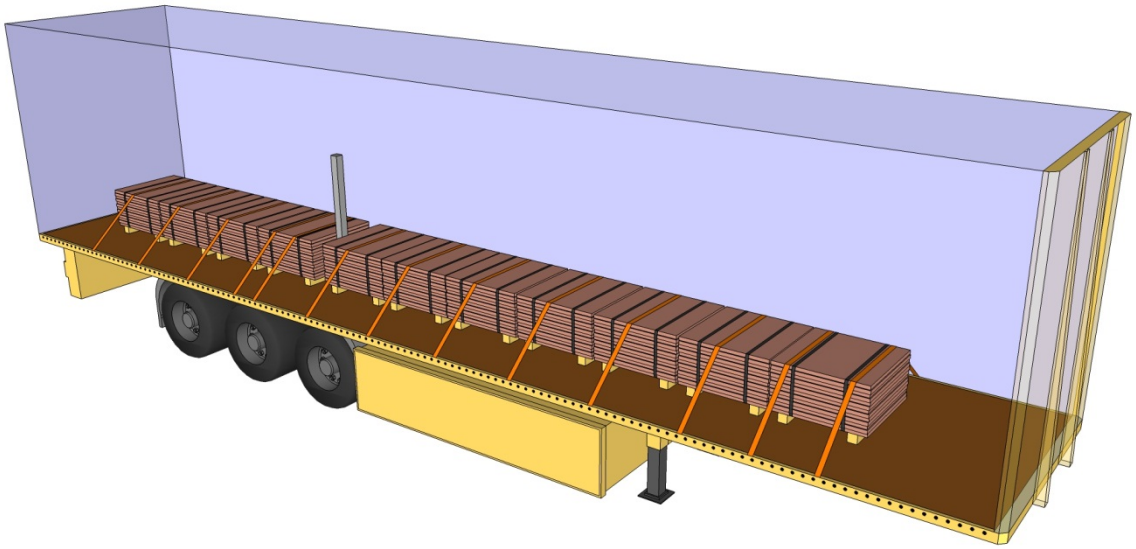

5. Estimated allowable acceleration

Forward: 0.56 g (63%), blocked against stanchion (37%)

Rearward: Blocked against stanchion (63%), 0.54 g (37%)

Sideways: 0.54 g (82%), 0.64 g (18%)

Lübeck no. 13

1. Cargo transport unit

Type:	Trailer, curtainsider, XL
Floor:	Plyfa

2. Cargo

Description of cargo:	Paper reels, standing, zig-zag	
Number of pieces:	31	*Pcs*
Total weight:	24	*ton*

3. Securing

Friction factor:	0.5	
Number of lashings:	10	*top-over lashings (1 per section)*
Pre-tension in lashings:	300	*daN*

4. Sketch

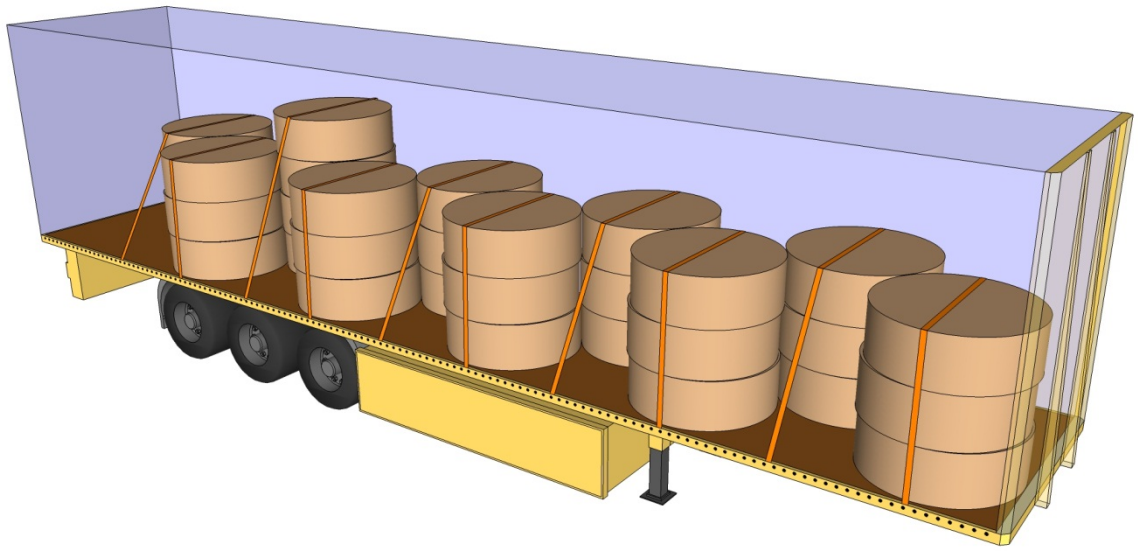

5. Estimated allowable acceleration

Forward:	Blocked against headboard
Rearward:	0.61 g
Sideways:	0.84 g

Lübeck no. 14

1. Cargo transport unit

Type:	Trailer, curtainsider, XL
Floor:	Plyfa

2. Cargo

Description of cargo:	Steel pipes in bunts on beams	
Number of pieces:	-	*Pcs*
Total weight:	28	*ton*

3. Securing

Friction factor:	0.35	
Number of lashings:	16	*top-over lashings*
Pre-tension in lashings:	100	*daN*

4. Sketch

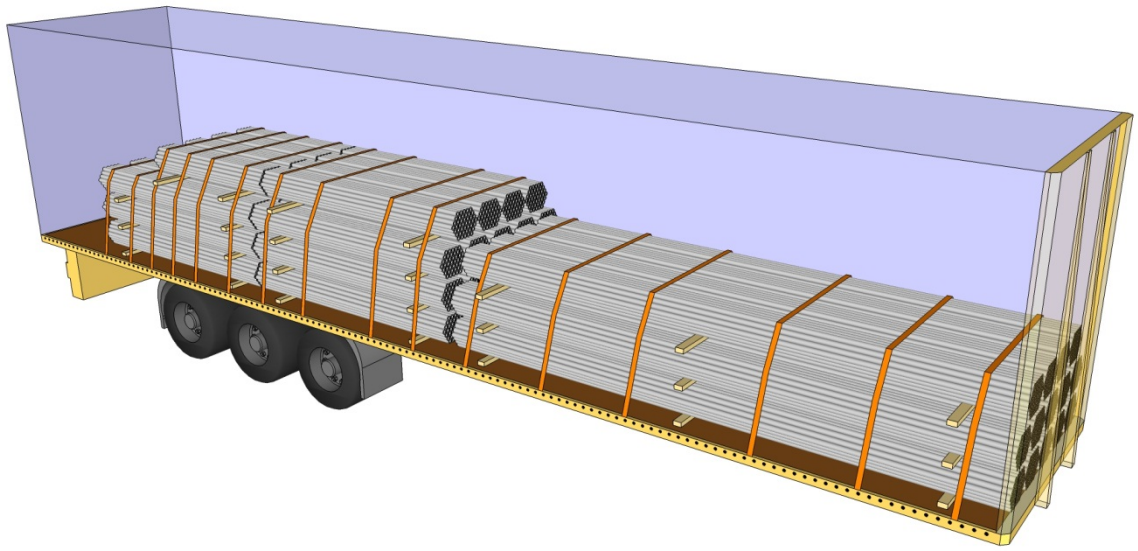

5. Estimated allowable acceleration

Forward:	Blocked against headboard (50%), 0.39 g (50%)
Rearward:	0.39 g
Sideways:	0.39 g

Lübeck no. 15

1. Cargo transport unit

Type:	Trailer, curtainsider, XL
Floor:	Plyfa

2. Cargo

Description of cargo:	Lead	
Number of pieces:	23	*Pcs*
Total weight:	24.5	*ton*

3. Securing

Friction factor:	0.60	
Number of lashings:	11	*top-over lashings (1 per section)*
Pre-tension in lashings:	350	*daN*

4. Sketch

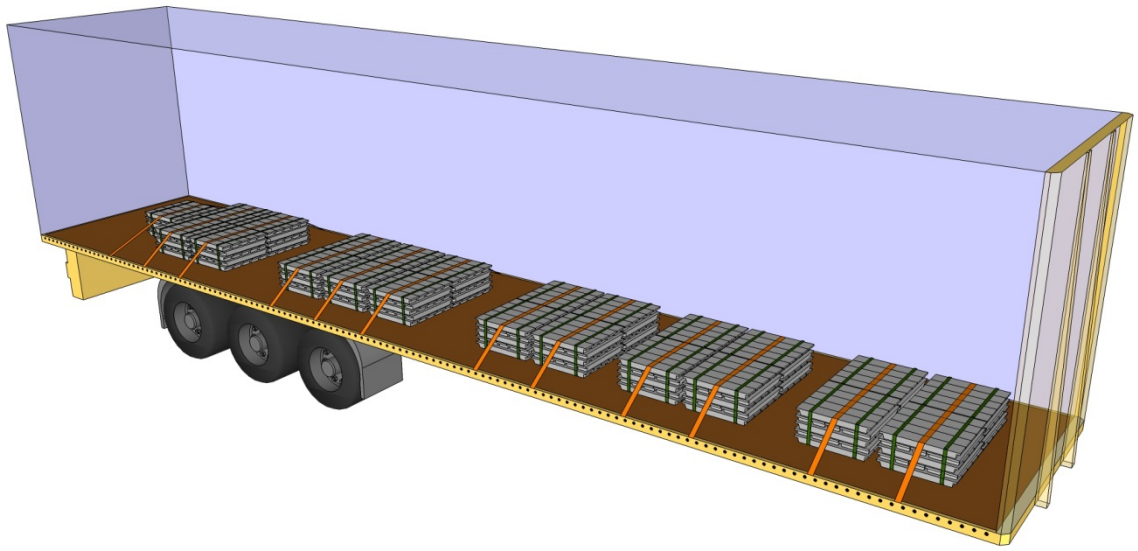

5. Estimated allowable acceleration

Forward:	0.70 g (96%), 0.74 g (4%)
Rearward:	0.70 g (96%), 0.74 g (4%)
Sideways:	0.70 g (96%), 0.74 g (4%)

Lübeck no. 16

1. Cargo transport unit

Type: Trailer, curtainsider, XL

Floor: Plyfa

2. Cargo

Description of cargo: Pallet cargo cages

Number of pieces: - *Pcs*

Total weight: 6.5 *ton*

3. Securing

Friction factor: 0.3 / 0.5

Number of lashings: 2 *top-over lashings*

Pre-tension in lashings: - *daN*

The top-over lashings were slack and are not included in the calculations

4. Sketch

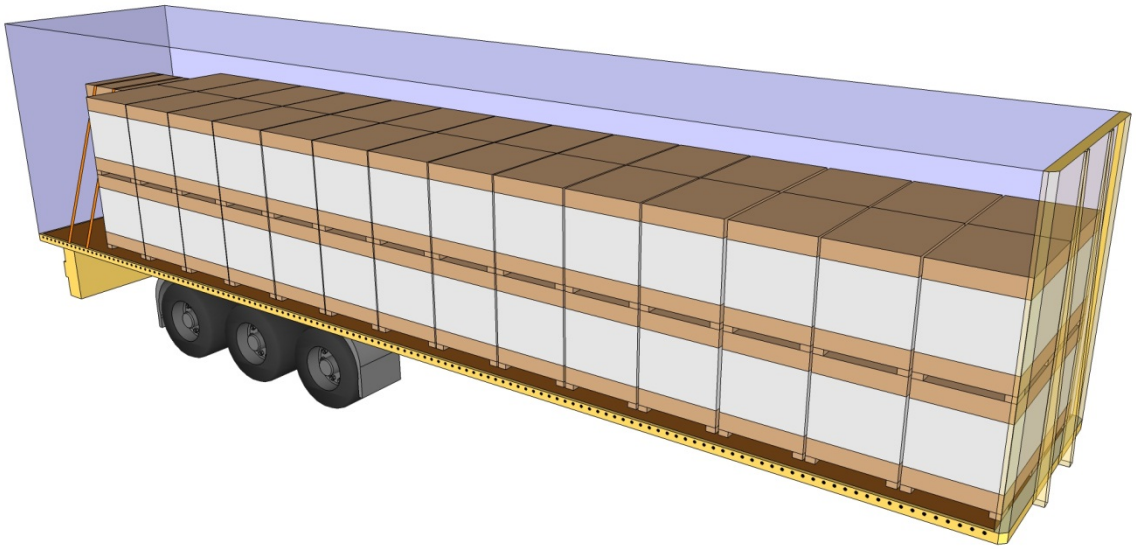

5. Estimated allowable acceleration

Forward: Blocked against headboard

Rearward: 0.50 g (50%), 0.30 g (50%)

Sideways: 0.50 g (50%), 0.30 g (50%)

Lübeck no. 17

1. Cargo transport unit

Type:	Trailer, curtainsider, XL
Floor:	Plyfa

2. Cargo

Description of cargo:	Pallet cargo	
Number of pieces:	32	*Pcs*
Total weight:	24.5	*ton*

3. Securing

Friction factor:	0.45	
Number of lashings:	16	*top-over lashings (1 per section)*
Pre-tension in lashings:	400	*daN*

4. Sketch

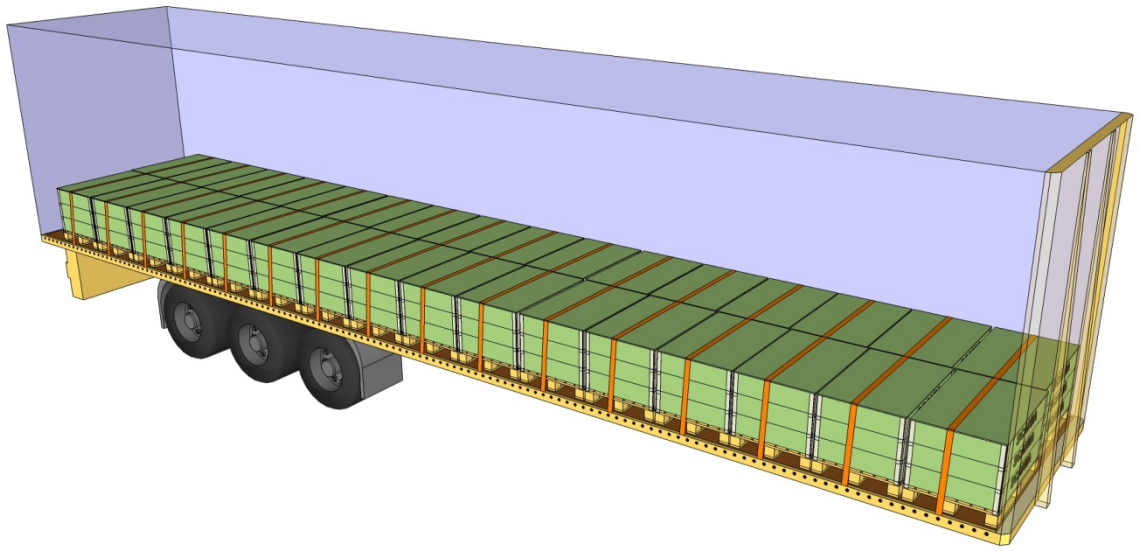

5. Estimated allowable acceleration

Forward:	Blocked against headboard
Rearward:	0.67 g
Sideways:	0.67 g (blocked against XL sides)

Lübeck no. 18

1. Cargo transport unit

Type:	Trailer, curtainsider, XL
Floor:	Plyfa

2. Cargo

Description of cargo:	Paper reels, laying (eye-to-front)	
Number of pieces:	8	*Pcs*
Total weight:	28	*ton*

3. Securing

Friction factor:	0.6	*rubber is used in contact surfaces*
Number of lashings:	12	*top-over lashings (3 per section)*
Pre-tension in lashings:	525	*daN*

4. Sketch

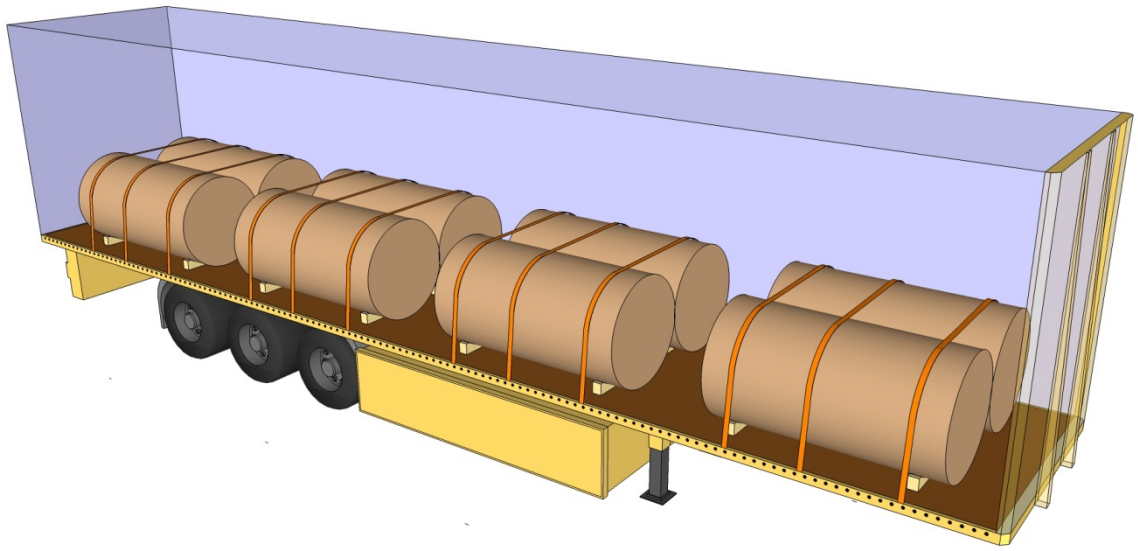

5. Estimated allowable acceleration

Forward:	0.85 g
Rearward:	0.85 g
Sideways:	0.29 g

Lübeck no. 19

1. Cargo transport unit

Type:	Trailer, curtainsider, XL
Floor:	Plyfa

2. Cargo

Description of cargo:	Pallets, copy paper	
Number of pieces:	42	*Pcs*
Total weight:	25	*ton*

3. Securing

Friction factor:	0.3	
Number of lashings:	15	*top-over lashings (1 per section)*
Pre-tension in lashings:	150	*daN*

4. Sketch

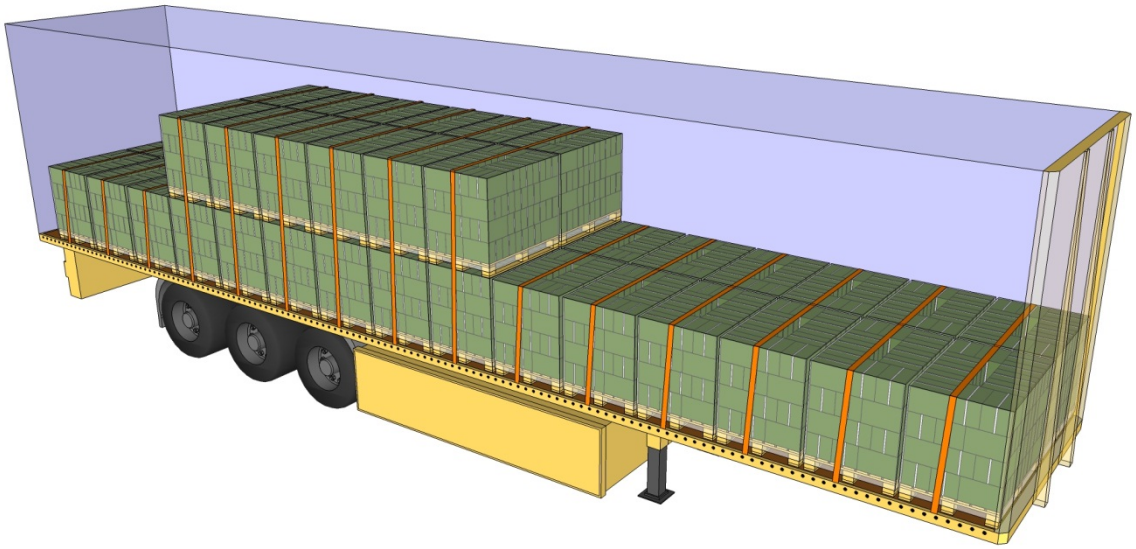

5. Estimated allowable acceleration

Forward:	Blocked against headboard (71%), 0.34 g (29%)
Rearward:	0.35 g
Sideways:	0.35 g (blocked against XL sides)

Lübeck no. 20

1. Cargo transport unit

Type:	Trailer, curtainsider, XL
Floor:	Plyfa

2. Cargo

Description of cargo:	Oktabins, granules	
Number of pieces:	22	*Pcs*
Total weight:	22	*ton*

3. Securing

Friction factor:	0.45	
Number of lashings:	11	*top-over lashings (1 per section)*
Pre-tension in lashings:	50	*daN*

4. Sketch

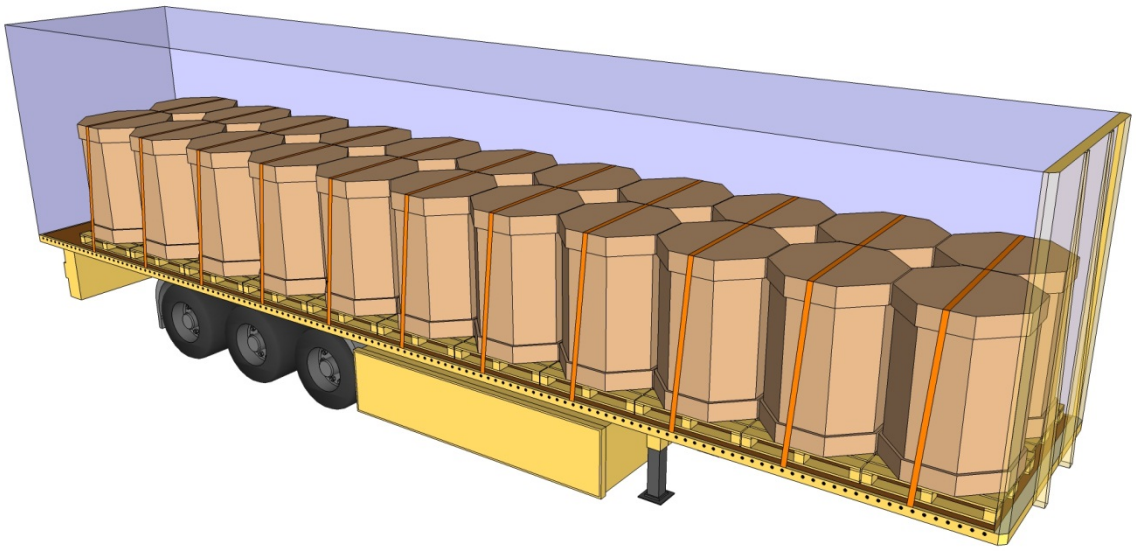

5. Estimated allowable acceleration

Forward:	Blocked against headboard
Rearward:	0.47 g
Sideways:	0.47 g

Lübeck no. 21

1. Cargo transport unit

Type:	Trailer, curtainsider, XL
Floor:	Plyfa

2. Cargo

Description of cargo:	Bags on pallet	
Number of pieces:	22	*Pcs*
Total weight:	22	*ton*

3. Securing

Friction factor:	0.4	
Number of lashings:	11	*top-over lashings (1 per section)*
Pre-tension in lashings:	50	*daN*

4. Sketch

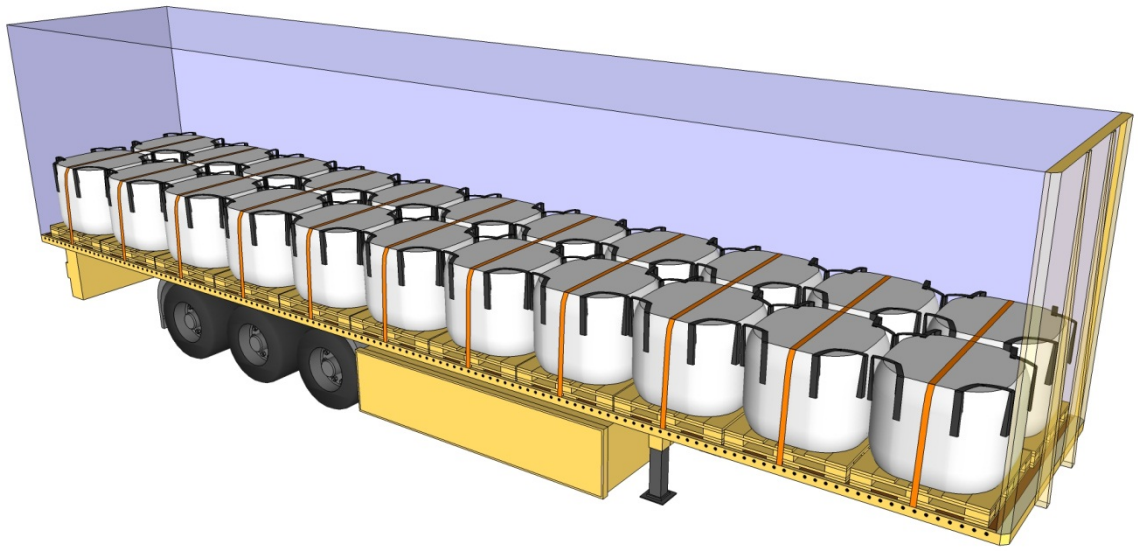

5. Estimated allowable acceleration

Forward:	Blocked against headboard
Rearward:	0.42 g
Sideways:	0.42 g

Lübeck no. 22

1. Cargo transport unit

Type:	Trailer, curtainsider, XL
Floor:	Plyfa

2. Cargo

Description of cargo:	Garbage	
Number of pieces:	-	*Pcs*
Total weight:	24.5	*ton*

3. Securing

Friction factor:	0.4	
Number of lashings:	-	*top-over lashings*
Pre-tension in lashings:	-	*daN*

4. Sketch

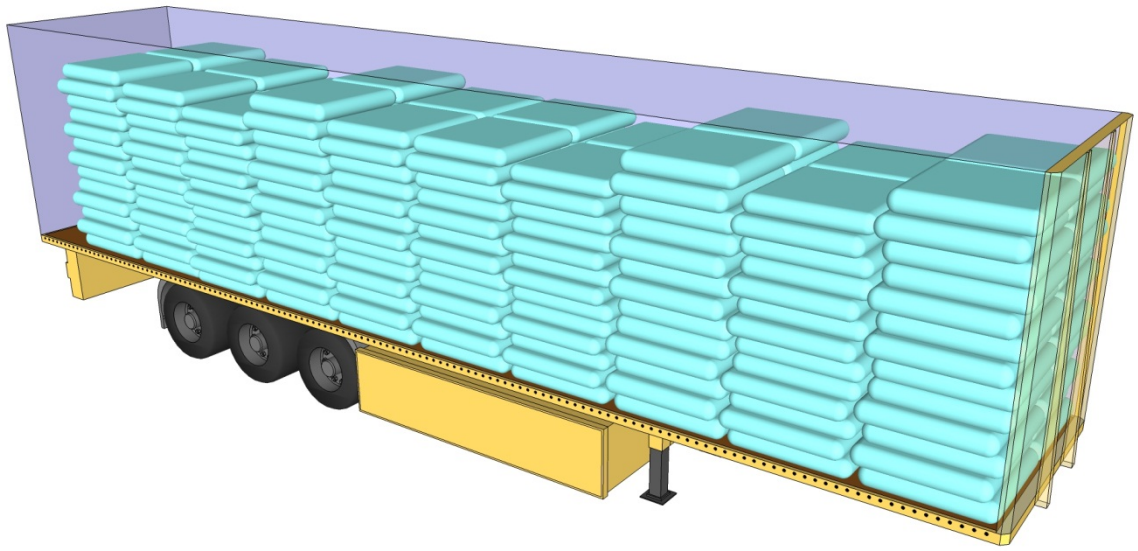

5. Estimated allowable acceleration

Forward:	Blocked against headboard
Rearward:	0.4 g
Sideways:	0.4 g (blocked against XL sides)

Lübeck no. 23

1. Cargo transport unit

Type: Trailer, curtainsider, non-XL

Floor: Plyfa

2. Cargo

Description of cargo: Timber packages

Number of pieces: - *Pcs*

Total weight: 24.5 *ton*

3. Securing

Friction factor: 0.45

Number of lashings: 8 *top-over lashings*

Pre-tension in lashings: 0 *daN*

The lashings were all slack and are not included in the calculations

4. Sketch

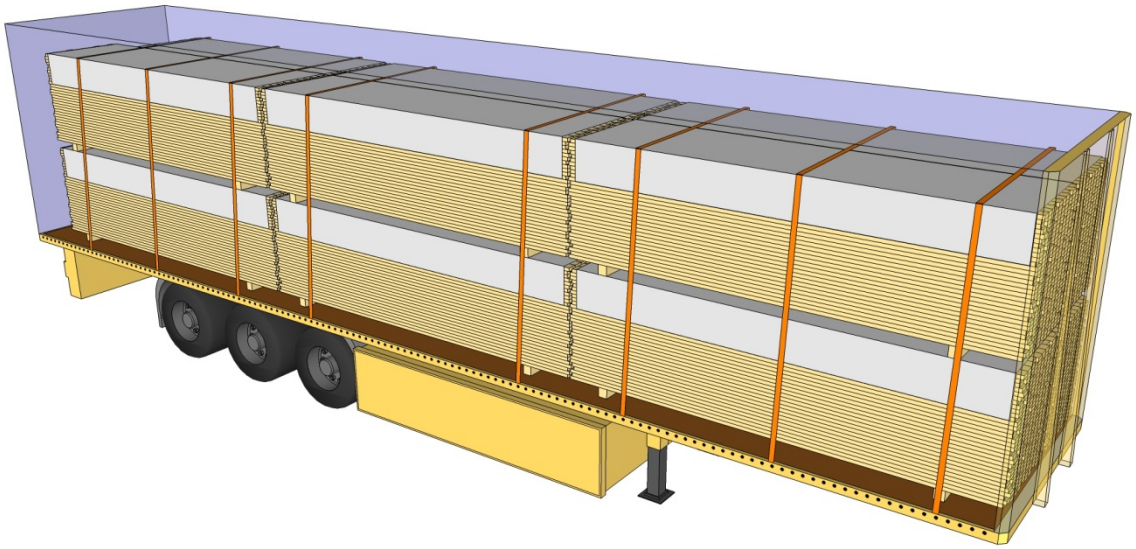

5. Estimated allowable acceleration

Forward: Blocked against headboard

Rearward: 0.45 g

Sideways: 0.45 g

Lübeck no. 24

1. Cargo transport unit

Type:	Trailer, curtainsider, XL
Floor:	Plyfa

2. Cargo

Description of cargo:	Pallet cargo, cartons with soap	
Number of pieces:	33	*Pcs*
Total weight:	16.2	*ton*

3. Securing

Friction factor:	0.45	
Number of lashings:	-	*top-over lashings*
Pre-tension in lashings:	-	*daN*

4. Sketch

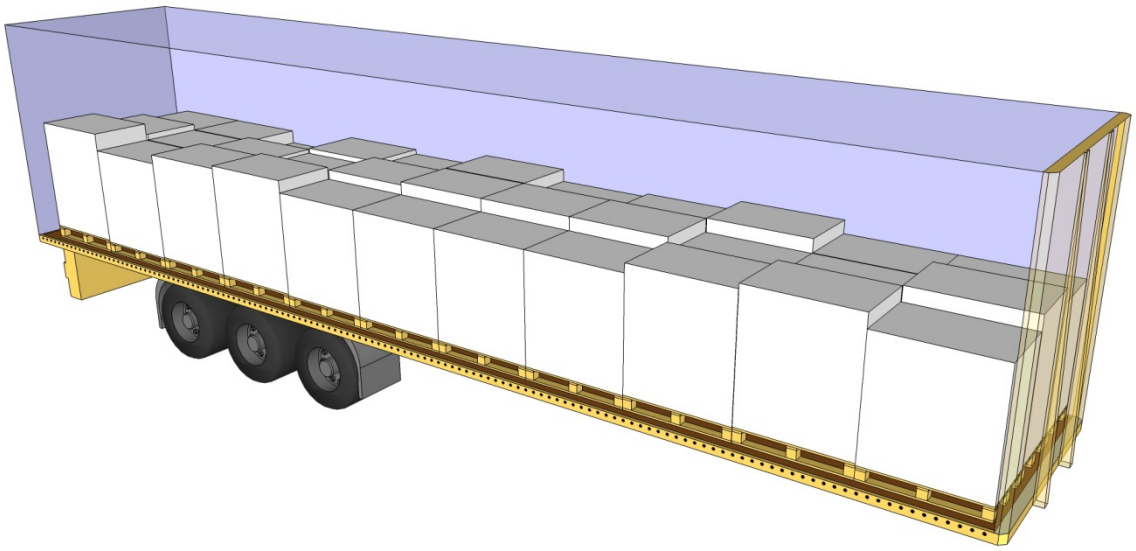

5. Estimated allowable acceleration

Forward:	Blocked against headboard
Rearward:	0.45 g
Sideways:	0.45 g (blocked against XL sides)

Lübeck no. 25

1. Cargo transport unit

Type:	Trailer, curtainsider, XL
Floor:	Plyfa

2. Cargo

Description of cargo:	Car glass	
Number of pieces:	-	*Pcs*
Total weight:	22	*ton*

3. Securing

Friction factor:	0.45	
Number of lashings:	11	*top-over lashings*
Pre-tension in lashings:	200	*daN*

4. Sketch

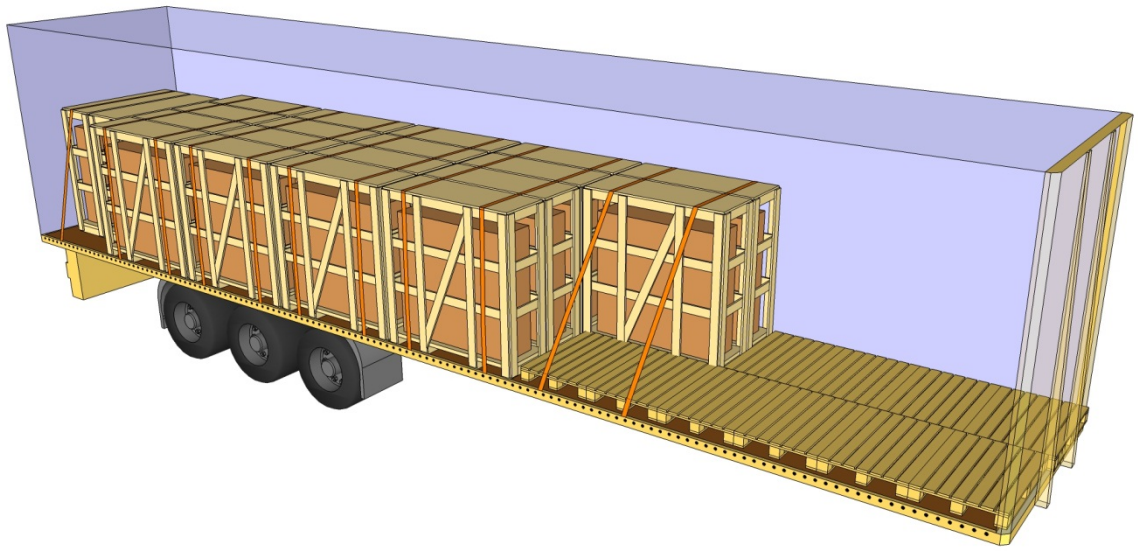

5. Estimated allowable acceleration

Forward:	Blocked against headboard with help of empty pallets
Rearward:	0.53 g
Sideways:	0.53 g (blocked against XL sides)

Lübeck no. 26

1. Cargo transport unit

Type:	Trailer, curtainsider, XL
Floor:	Plyfa

2. Cargo

Description of cargo:	Pallet cargo, oktabins	
Number of pieces:	47	*Pcs*
Total weight:	26	*ton*

3. Securing

Friction factor:	0.45	
Number of lashings:	20	*top-over lashings (1 per section)*
Pre-tension in lashings:	300	*daN*

4. Sketch

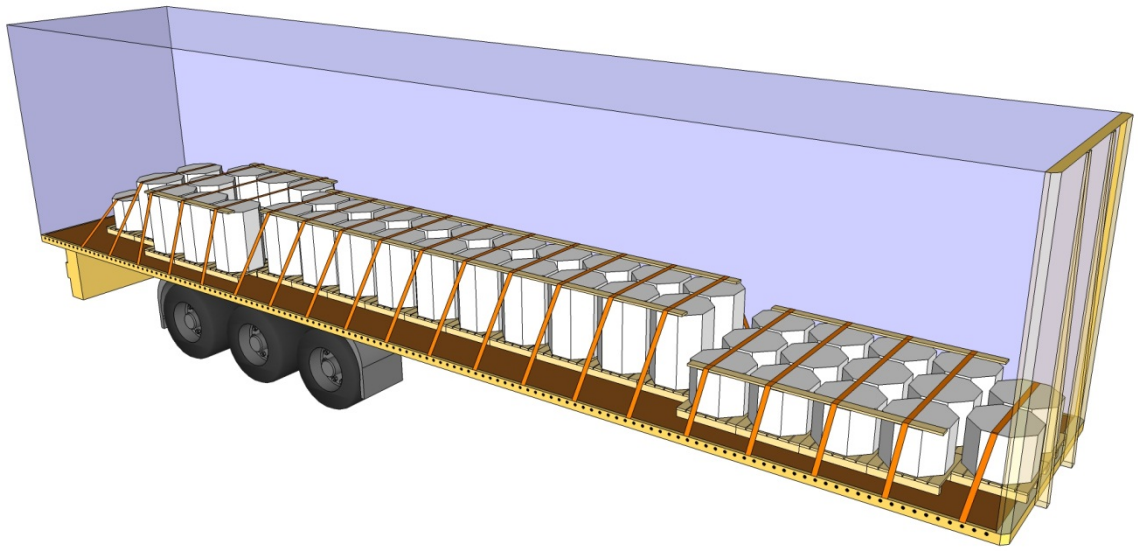

5. Estimated allowable acceleration

Forward:	Blocked against headboard
Rearward:	0.63 g
Sideways:	0.62 g (51%), 0.61 g (22%), 0.61 g (22%), 0.63 g (7%)

Lübeck no. 27

1. Cargo transport unit

Type:	Trailer, curtainsider, XL
Floor:	Plyfa

2. Cargo

Description of cargo:	Pallet cargo	
Number of pieces:	32	*Pcs*
Total weight:	28	*ton*

3. Securing

Friction factor:	0.45	
Number of lashings:	20	*top-over lashings (2 per section)*
Pre-tension in lashings:	450	*daN*

4. Sketch

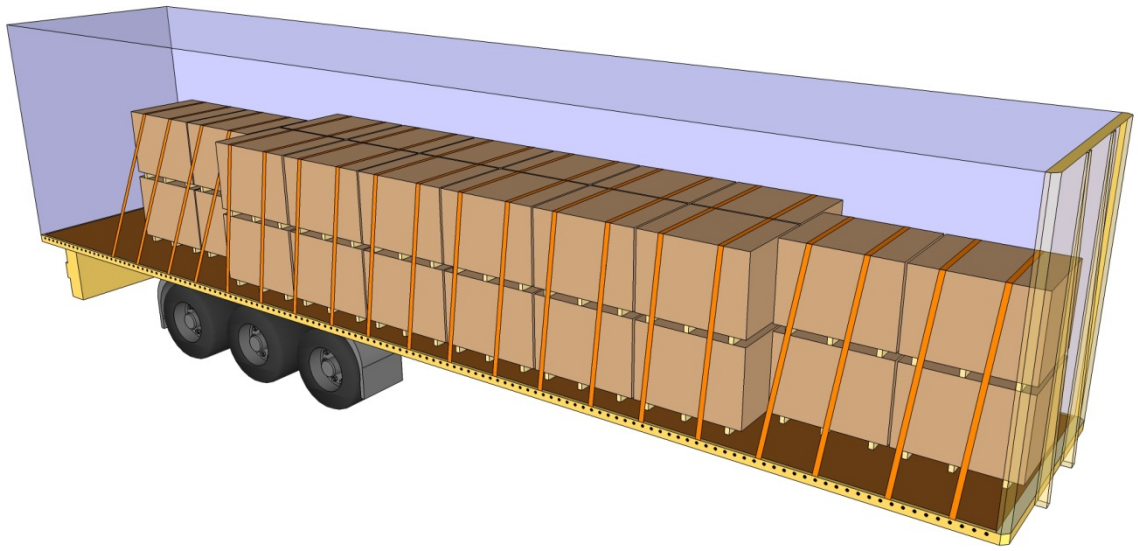

5. Estimated allowable acceleration

Forward:	Blocked against headboard
Rearward:	0.71 g
Sideways:	0.66 g (75%), 0.84 g (25%)

Lübeck no. 28

1. Cargo transport unit

Type:	Trailer, curtainsider, XL
Floor:	Plyfa

2. Cargo

Description of cargo:	Timber packages	
Number of pieces:	-	*Pcs*
Total weight:	18	*ton*

3. Securing

Friction factor:	0.45	
Number of lashings:	9	*top-over lashings (3 per section)*
Pre-tension in lashings:	25	*daN*

4. Sketch

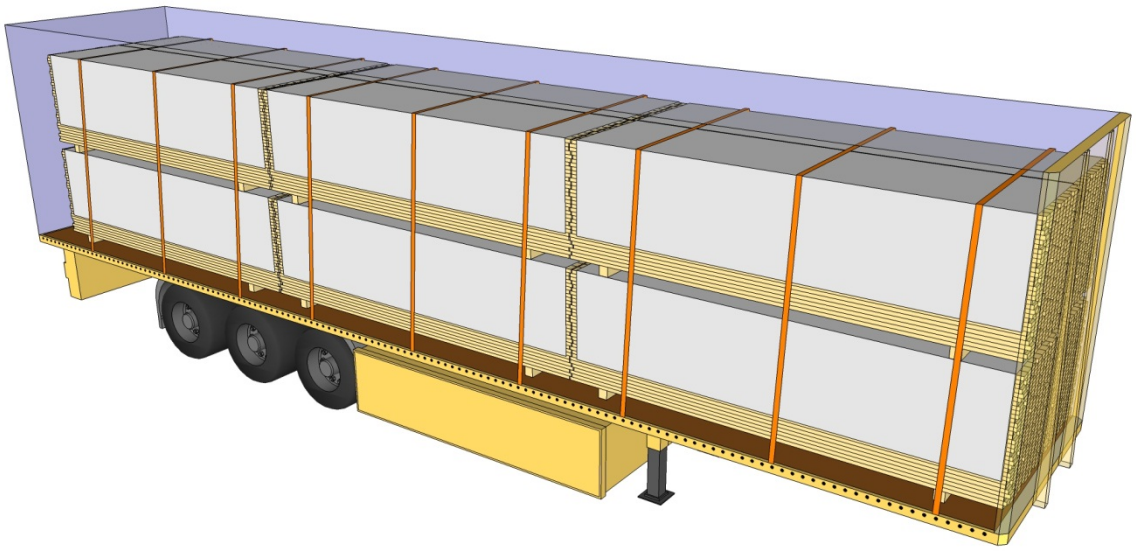

5. Estimated allowable acceleration

Forward:	Blocked against headboard
Rearward:	0.46 g
Sideways:	0.46 g

Lübeck no. 29

1. Cargo transport unit

Type:	Trailer, curtainsider, XL
Floor:	Plyfa

2. Cargo

Description of cargo:	Pallets, pumps, cartons	
Number of pieces:	-	*Pcs*
Total weight:	18	*ton*

3. Securing

Friction factor:	0.45	
Number of lashings:	-	*top-over lashings*
Pre-tension in lashings:	-	*daN*

4. Sketch

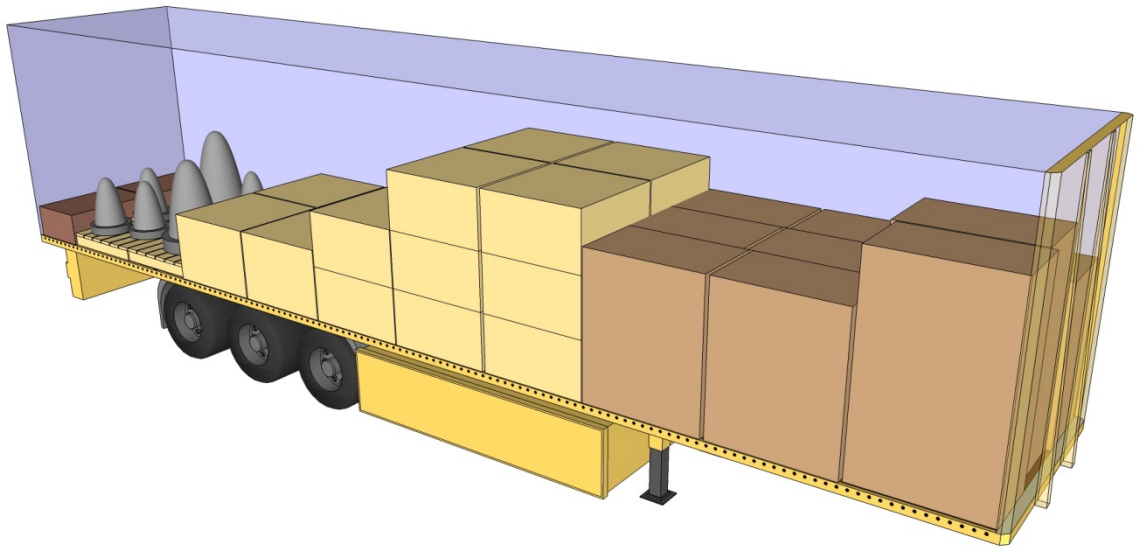

5. Estimated allowable acceleration

Forward:	Blocked against headboard
Rearward:	0.45 g
Sideways:	0.45 g (blocked against XL sides)